FRIGIDAIRE

GAS RANGE use & care

Introduction 2
Important Safety Instructions 3
Cooking Recommendations 10
Before Setting Surface Controls 13
Setting Surface Controls 16
Before Setting Oven Controls 19
Setting Oven Controls 20
Care and cleaning 29
Before You Call 35
Warranty 40

A33059321 (July 2026)

INTRODUCTION

Welcome to our *family*

Thank you for bringing Frigidaire into your home! We see your purchase as the beginning of a long relationship together.

This manual is your resource for the use and care of your product. Please read it before using your appliance. Keep it handy for quick reference. If something doesn't seem right, the troubleshooting section will help you with common issues.

FAQs, helpful tips and videos, cleaning products, and kitchen and home accessories are available at www.frigidaire.com.

We are here for you! Visit our website, chat with an agent, or call us if you need help. We may be able to help you avoid a service visit. If you do need service, we can get that started for you.

Let's make it official! Be sure to register your product.

Keep your product info here so it's easy to find.

Model Number: _____

Serial Number: _____

Purchase Date: _____

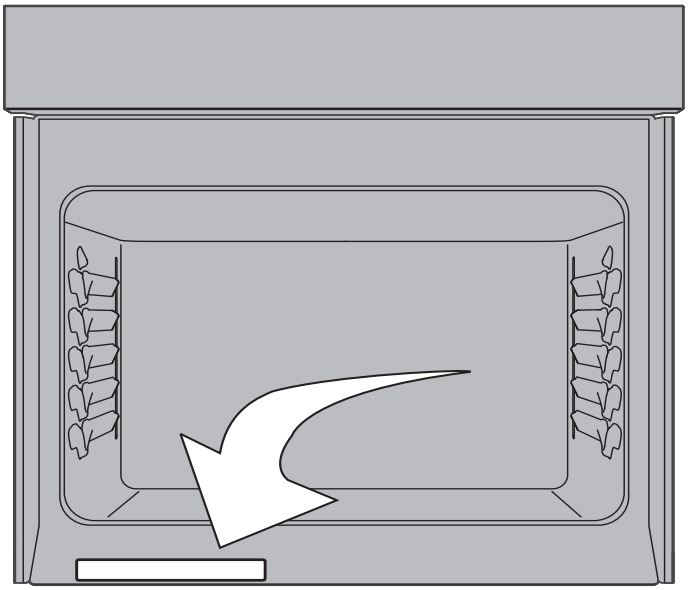

Serial Number Location

Installation Checklist

- ☐ Read all the safety instructions in the front of your Use & Care Manual.
- ☐ Remove all packaging materials from your appliance before cooking.
- ☐ Confirm that the electrical power to the appliance is turned on.
- ☐ Confirm that the gas regular is turned on. Check your installation instructions if you need help.
- ☐ Wipe out the inside of the oven cavity with a damp cloth.
- ☐ Apply a thin layer of cooking oil to the sides of the oven racks to keep them gliding smoothly.
- ☐ Set the clock. See (page 21) for instructions.
- ☐ Test all surface burners to make sure they are working properly (page 16).
- ☐ Before cooking, set the oven to bake at 350°F (177ºC) for 30 minutes (page 24). Some noise and odors are normal on the first cooking cycle.
- ☐ Remember to complete your product registration!

Read all instructions before using this appliance.

This manual contains important safety symbols and instructions. Please pay attention to these symbols and follow all instructions given.

Do not attempt to install or operate your appliance until you have read the safety precautions in this manual. Safety items throughout this manual are labeled with a WARNING or CAUTION statement based on the risk type.

Warnings and important instructions appearing in this guide are not meant to cover all possible conditions and situations that may occur. Common sense, caution, and care must be exercised with installing, maintaining, or operating your appliance.

DEFINITIONS

This is the safety alert symbol. It is used to alert of potential personal injury hazards. Obey all safety messages that follow this symbol to avoid possible injury or death.

WARNING

Indicates a potentially hazardous situation which, if not avoided, may result in death or serious injury.

CAUTION

Indicates a potentially hazardous situation which, if not avoided, may result in minor or moderate injury.

IMPORTANT

Indicates installation, operation or maintenance information which is important but not hazard-related.

NOTE

Indicates a short, informal reference – something written down to assist the memory or for future reference.

WARNING If the information in this manual is not followed exactly, a fire or explosion may result causing property damage, personal injury or death.

FOR YOUR SAFETY:

—Do not store or use gasoline or other flammable vapors and liquids in the vicinity of this or any other appliance.

—WHAT TO DO IF YOU SMELL GAS:

- Do not try to light any appliance.
- Do not touch any electrical switch; do not use any phone in your building.
- Immediately call your gas supplier from a neighbor's phone. Follow the gas supplier's instructions.
- If you cannot reach your gas supplier, call the fire department.

—Installation and service must be performed by a qualified installer, servicer or the gas supplier.

WARNING

Never operate the top surface cooking section of this appliance unattended.

- Failure to follow this warning statement could result in fire, explosion, or burn hazard that could cause property damage, personal injury, or death.
- If a fire should occur, keep away from the appliance and immediately call your fire department.

DO NOT ATTEMPT TO EXTINGUISH AN OIL/GREASE FIRE WITH WATER.

WARNING

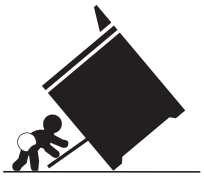

Tip Over Hazard

- **A child or adult can tip the range and be killed.**
- **Verify the anti-tip device has been installed to floor or wall.**
- **Ensure the anti-tip device is re-engaged to floor or wall when the range is moved.**
- **Do not operate the range without the anti-tip device in place and engaged.**
- **Failure to follow these instructions can result in death or serious burns to children and adults.**

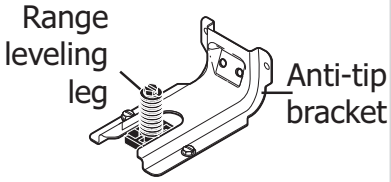

To check if the anti-tip bracket is installed properly, use both arms to grasp the rear edge of the range back. Carefully attempt to tilt range forward. When properly installed, the range should not tilt forward.

Refer to the anti-tip bracket installation instructions supplied with your range for proper installation.

IMPORTANT INSTRUCTIONS FOR UNPACKING AND INSTALLATION

IMPORTANT

Read and follow the below instructions and precautions for unpacking, installing, and servicing your appliance.

Remove all tape and packaging before using the appliance. Destroy the carton and plastic bags after unpacking the appliance.

Never allow children to play with packaging material. Do not remove the wiring label and other literature attached to the appliance. Do not remove model/serial number plate.

Cold temperatures can damage the electronic control. When using this appliance for the first time, or when the appliance has not been used for an extended period of time, be sure the appliance has been in temperatures above 32ºF (0ºC) for at least 3 hours before turning on the power to the appliance.

All materials used in construction of cabinets, enclosures, and supports surrounding the product must have a temperature rating above 200°F (94°C).

Never modify or alter the construction of the appliance by removing the leveling legs, panels, wire covers, anti-tip brackets/screws, or any other part of the appliance.

Be sure to have an appropriate foam-type fire extinguisher available, visible, and easily accessible located near the appliance.

WARNING

Air curtain or other overhead range hoods which operate that operate by blowing a downward air flow onto a range or cooktop, shall not be used in conjunction with gas ranges or cooktops other than when the range or cooktop and hood have been designed, tested, and listed by an independent test laboratory for use in combination with each other.

GROUNDING INSTRUCTIONS

WARNING

- Avoid fire hazard or electrical shock. Failure to follow this warning may cause serious injury, fire, or death.
- Avoid fire hazard or electrical shock. Do not use an adapter plug, use an extension cord, or remove grounding prong from the power cord. Failure to follow this warning may cause serious injury, fire, or death.

Proper Installation—Be sure your appliance is properly installed and grounded by a qualified technician. In the United States, install in accordance with the National Fuel Gas Code ANSI Z223.1/NPFA No. 54, latest edition and National Electrical Code NFPA No. 70 latest edition, and local electrical code requirements. In Canada, install in accordance with CAN/CGA B149.1 and CAN/CGA B149.2 and CSA Standard C22.1, Canadian Electrical code, Part 1-latest editions and local electrical code requirements. Install only per installation instructions provided in the literature package for this appliance.

For personal safety, this appliance must be properly grounded. For maximum safety, the power cord must be securely connected to an electrical outlet or junction box that is the correct voltage, is correctly polarized and properly grounded, and protected by a circuit breaker in accordance with local codes.

It is the personal responsibility of the consumer to have the appropriate outlet or junction box with the correct, properly grounded wall receptacle installed by a qualified electrician. It is the responsibility and obligation of the consumer to contact a qualified installer to assure that the electrical installation is adequate and is in conformance with all local codes and ordinances.

This appliance is equipped with a 3-prong grounding plug for your protection against shock hazard and should be plugged directly into a properly grounded receptacle. Do not cut or remove the grounding prong from this plug.

For personal safety, the appliance must be properly grounded. For maximum safety, the power cord must be plugged into an electrical outlet that is correctly polarized and properly grounded.

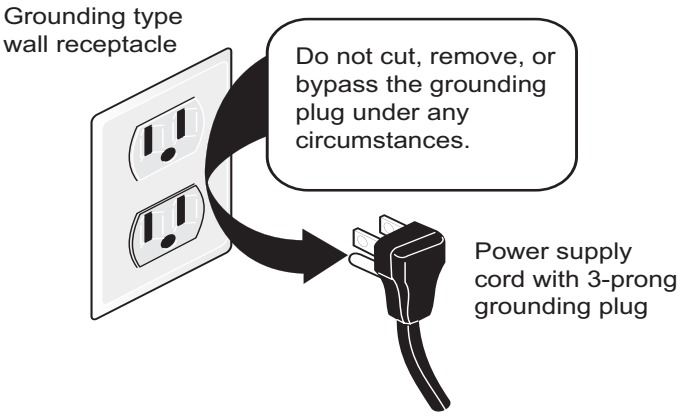

If a 2-prong wall receptacle is the only available outlet, it is the personal responsibility of the consumer to have it replaced with a properly grounded 3-prong wall receptacle, installed by a qualified technician.

Conversion to (L.P.) Gas

This appliance allows for conversion to Liquefied Petroleum (L.P.) Gas.

WARNING

Personal injury or death from electrical shock may occur if the conversion to L.P. gas is not made by a qualified installer or electrician. Any additions, changes or conversions required in order for this appliance to satisfactorily meet the application needs must be made by a qualified technician.

If L.P. conversion is needed, contact your local L.P. Gas provider for assistance.

See the installation instructions packaged with this appliance for complete installation and grounding instructions.

IMPORTANT INSTRUCTIONS FOR USING THE APPLIANCE

WARNING

- Storage In or On Appliance—Flammable materials should not be stored in an oven or microwave, near surface burners or elements, or in the storage or warmer drawer (if equipped). This includes paper, plastic, and cloth items, such as cookbooks, plastic ware, and towels, as well as flammable liquids. Do not store explosives, such as aerosol cans, on or near the appliance.

WARNING

- Do not leave children alone - Children should not be left alone or unattended in the area where appliance is in use. They should never be allowed to sit or stand on any part of the appliance, including the storage drawer, lower broiler drawer, warmer drawer, or lower double oven.
- Do not store items of interest to children in the cabinets above the appliance or on the backguards of ranges. Children climbing on or near the appliance to reach items could be seriously injured.
- Do not allow children to climb or play around the appliance. The weight of a child on an open oven door may cause the appliance to tip, resulting in serious burns or other injury. An open drawer when hot may cause burns.
- Stepping, leaning, or sitting on the door or drawers of this appliance can result in serious injuries and also cause damage to the appliance.
- Never cover any slots, holes or passages in the oven bottom or cover and entire rack with materials such as aluminum foil. Doing so blocks air flow through the oven and may cause carbon monoxide poisoning. Aluminum foil linings may also trap heat, causing a fire hazard.
- Do not use oven or warmer drawer (if equipped) for storage.
- Never use your appliance as a space heater to heat or warm the room. Doing so may result in carbon monoxide poisoning and overheating of the appliance

CAUTION

- When heating fat or grease, watch it closely. Grease may catch fire if it becomes too hot.
- Do not use water or flour on grease fires. Smother fire or flame or use dry chemical or foam-type extinguisher. Cover the fire with a pan lid or use baking soda.
- Use dry potholders. Moist or damp potholders on hot surfaces may result in burns from steam. Do not let potholders touch hot cooking areas. Do not use towels or other bulky cloths.
- Do not heat unopened food containers - Build-up of pressure may cause container to burst and result in injury.
- Wear proper apparel - Loose-fitting or hanging garments should never be worn while using the appliance. Do not let clothing or other flammable materials contact hot surfaces.
- Do not touch surface burners or elements, areas near these burners or elements, interior surfaces of the oven, or the warmer drawer (if equipped). Surface burners and elements may be hot even though they appear cool. Areas near surface burners and elements may become hot enough to cause burns. During and after use, do not touch, or let clothing or other flammable materials touch these areas until they are cool. These areas may include the cooktop, surfaces facing the cooktop, oven vent areas, oven door, and oven window.

CAUTION

- Do not attempt to operate the appliance during a power failure. If the power fails, always turn off the appliance. If the appliance is not turned off and the power resumes, electric surface elements may resume operation when power is restored. Once the power resumes, reset the clock and the oven function.

IMPORTANT INSTRUCTIONS FOR USING YOUR GAS COOKTOP

CAUTION

Use Proper Flame Size — Adjust flame size so it does not extend beyond the edge of the utensil. The use of undersized utensils will expose a portion of the burner flame to direct contact and may result in ignition of clothing. Proper relationship of utensil to flame will also improve efficiency.

Know which knob or key controls each surface heating area. Place cookware with food on the cooking area before turning it on. Turn the cooking area off before removing the cookware.

Use proper pan size. This appliance is equipped with one or more surface units of different sizes. Select cookware with flat bottoms that match the surface unit heating element. The use of undersized cookware may expose a portion of the flame to direct contact and may result in the ignition of clothing or other items. Using the proper cookware on the cooking areas will improve efficiency.

Always turn knob to the full LITE position when igniting top burners. Visually check that burner has lit. Then adjust the flame so it does not extend beyond the edge of the utensil.

To reduce the risk of burns, ignition of flammable materials, and spillage due to unintentional contact with the utensil, the handle of the utensil should be positioned so that it is turned inward, and does not extend over adjacent surface burners

Never leave surface burners unattended at high heat settings — Boil overs cause smoking and greasy spill overs that may ignite, or a pan that has boiled dry may melt.

Glazed cooking utensils — Only certain types of glass, glass/ceramic, ceramic,earthenware, or other glazed utensils are suitable for cook top service without breaking due to the sudden change in temperature. Check the manufacturer's recommendations for cook top use.

When you are flaming foods under a ventilating hood, turn the fan on.

IMPORTANT INSTRUCTIONS FOR USING YOUR OVEN

Protective liners—Do not use aluminum foil, aftermarket oven liners, or any other materials or devices to line oven bottom, oven racks, or any other part of the appliance. Only use aluminum as recommended for baking, such as lining cookware or as a cover placed on food. Any other use of protective liners or aluminum foil may result in a risk of electric shock or fire or a short circuit.

Use care when opening oven door, lower oven door, or warmer drawer (some models). Stand to the side of the appliance when opening the door of a hot oven. Let hot air or steam escape before you remove or replace food in the oven.

Keep oven vent ducts unobstructed. Touching surfaces in this area when the oven is on may cause severe burns. Do not place plastic or heat-sensitive items on or near the oven vent. These items can melt or ignite.

Placement of oven racks - Always place oven racks in desired location while oven is cool. If rack must be moved while oven is hot, do not let potholder contact hot burner or element in oven. Use potholders and grasp the rack with both hands to reposition. Remove all cookware and utensils before moving the rack.

Do not use a broiler pan without its insert. Broiler pans and inserts allow dripping fat to drain away from the high heat of the broiler. Do not cover the broiler insert with aluminum foil; exposed fat and grease could ignite.

Do not cook food on the oven bottom. Always cook in proper cookware and always use the oven racks.

IMPORTANT INSTRUCTIONS FOR CLEANING YOUR APPLIANCE

CAUTION

Before manually cleaning any part of the appliance, be sure all controls are turned off and the appliance is cool. Cleaning a hot appliance can cause burns.

Clean the appliance regularly to keep all parts free of grease that could catch fire. Do not allow grease to accumulate. Greasy deposits in the fan could catch fire.

Always follow the manufacturer's recommended directions for use of kitchen cleaners and aerosols. Be aware that excess residue from cleaners and aerosols may ignite causing damage and injury.

Clean ventilating hoods frequently - Grease should not be allowed to accumulate on hood or filter. Follow the manufacturer's instructions for cleaning vent hoods.

IMPORTANT INSTRUCTIONS FOR SERVICE AND MAINTENANCE

Do not repair or replace any part of the appliance unless specifically recommended in the manuals. All other servicing should be done only by a qualified technician. This reduces the risk of personal injury and damage to the appliance.

Always contact your dealer, distributor, service agent, or manufacturer about problems or conditions you do not understand.

Ask your dealer to recommend a qualified technician and an authorized repair service. Know how to disconnect the power to the appliance at the circuit breaker or fuse box in case of an emergency.

Remove the oven door from any unused oven if it is to be stored or discarded.

Do not touch a hot oven light bulb with a damp cloth. Doing so could cause the bulb to break. Handle halogen lights (if equipped) with paper towels or soft gloves. Disconnect the appliance or shut off the power to the appliance before removing and replacing the bulb.

WARNING

California Residents: for cancer and reproductive harm information, visit www.P65Warnings.ca.gov

Bakeware

The material of bakeware affects how evenly and quickly it transfers heat from the pan to the food.

Material	Attributes	Recommendation
Shiny metal bakeware	Shiny, aluminum, and non-coated bakeware is the best for even heating. It is suitable for all baked goods.	Recommended cooking temperatures and times are based on shiny metal bakeware.
Dark metal bakeware	Dark bakeware cooks hotter than shiny bakeware.	Reduce the cooking temperature by 25° F (13-14° C) when using dark bakeware.
Glass bakeware 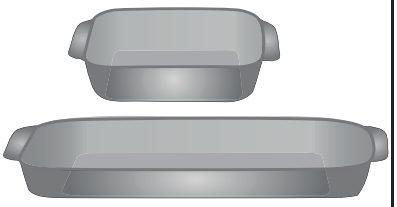	Glass bakeware cooks hotter than shiny bakeware. Glass is convenient, as the same piece of bakeware can be used for cooking, serving, and storing food.	Reduce the cooking temperature by 25° F (13-14° C) when using glass bakeware.
Insulated bakeware 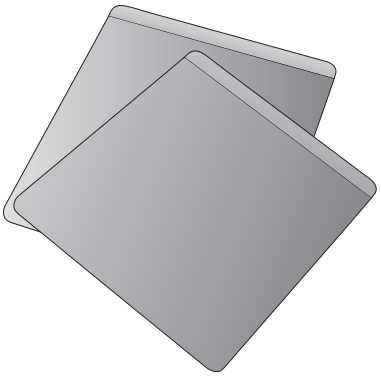	Insulated bakeware cooks cooler than shiny bakeware. Insulated bakeware is designed for baking in gas ovens.	Reduce the cooking temperature by 25° F (13-14° C) when using glass bakeware.

Cooking Conditions

Conditions in your kitchen can affect the performance of your appliance when cooking food.

Condition	Attributes	Recommendation
Aging cookware	As pans age and become discolored, cooking times may need to be reduced slightly.	If food is too dark or overcooked, use the minimum cook time in the recipe or packaging. If food is too light or undercooked, use the middle to maximum cook time in the recipe or packaging.
High altitude	Air is drier and air pressure is lower. Water boils at a lower temperature, and liquids evaporate faster. Foods may take longer to bake. Doughs may rise faster.	Adjust cooking temperature, cooking time, or recipes as needed. Increase amount of liquid in baking recipes. Increase cook time on cooktop. Cover dishes to reduce evaporation. Increase bake time or oven temperature. Reduce amount of baking soda or baking powder in recipe. Reduce rising time or punch down dough and allow it to rise twice.

Cooking Results

Small adjustments may fix a problem with food not being as done as you like or more done than you like.

Result	Recommendation
Food too light	Use the middle to maximum cook time recommended on packaging or recipe.
Food too dark	Use the minimum cook time recommended on packaging or recipe.

Cooking Tips

Use these additional tips to get the best results from your appliance.

Situation	Recommendation
Baking	
Rack placement	Follow the instructions in “Setting Oven Controls” starting on page 20. When using only one rack, place the rack so the food is in the center of the oven.
Preheat	Fully preheat the oven before baking items like cookies, cakes, biscuits and breads. Insert food immediately after the beep.
Checking food	Use the window and oven light when checking food. Opening the door may reduce baking performance.
Bake or Convection Bake	Convection bake is the best function to use for baking on multiple racks. For best performance, see “Convection Bake” on page 25.
Food placement	Allow at least 2 inches (5 cm) of space between bakeware for proper air circulation.

Material	Recommendation
Broiling / Roasting	
Broiling pan	For best results when broiling, use a broil pan with a broil pan insert designed to drain the fat from the food, help avoid spatter, and reduce smoking. The broiler pan will catch grease spills, and the insert helps prevent grease splatters. If a broiler pan and insert are not supplied with this appliance, they may be purchased from Frigidaire.com.
Convection Cooking	
Convection attributes	Convection cooking uses a fan to circulate hot air around the oven and food. It browns food more evenly and reduces hot spots in the oven. Convection saves time when using multiple racks or cooking several food items at once.
Convection bake	Reduce cooking temperature by 25° F (13-14° C) from the recipe unless the recipe is written for convection baking. Preheat the oven for best results.

Gas surface burner types

The cooktop is equipped with gas surface burners with different BTU ratings. The ability to heat food quickly and in large amounts increases as the burner size increases.

- Small burners are best used for low-flame heating of small amounts of food.
- Standard burners can be used for most surface cooking needs.
- The largest burner is best used for bringing large quantities of liquid rapidly up to temperature or when preparing larger quantities of food. The large burner is located at the right front position on the cooktop.

Regardless of size, always select cookware that is suitable for the amount and type of food being prepared. Select a burner and set the flame size appropriately for the pan. Never allow flames to extend beyond the outer edge of the pan.

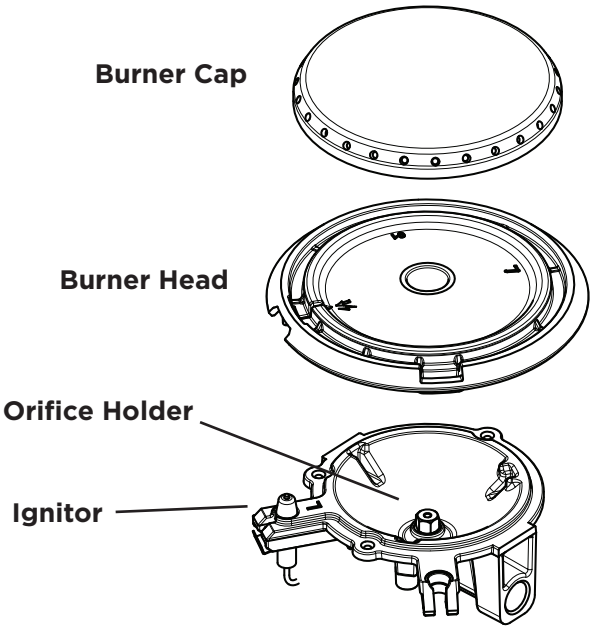

Figure 1: Burner cap, burner head, ignitor, and orifice

Assembly of the Burner Caps

Make sure that all of the surface burner caps and surface burner grates are installed correctly and at the correct locations.

1. Remove all packing material from the cooktop area.
2. Make sure burner head and caps are properly placed on the surface burners.

Important: The burner head has a hole which fits over the ignitor. Make sure the head fits snugly before placing the burner caps.

Note: Unpack the burner grates and position them on the cooktop after the burner heads and caps are properly installed.

CAUTION

- Do not allow spills, food, cleaning agents, or any other material to enter the gas orifice holder opening.
- Always keep the burner caps and burner heads in place whenever the surface burners are in use.
- Never place flammable items on the cooktop.

Using Proper Cookware

The size and type of cookware used will influence the heat setting needed for best cooking results. Be sure to follow the recommendations for using proper cookware as illustrated in “Figure 2: Testing cookware” and “Figure 3: Proper cookware”.

Check for flatness by rotating a ruler across the bottom of the cookware (see “Figure 2: Testing cookware”). Cookware should have flat bottoms that make good contact with the entire surface of the heating element.

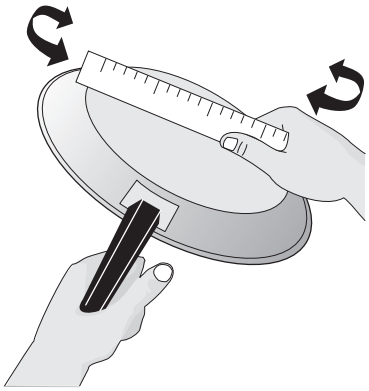

Figure 2: Testing cookware

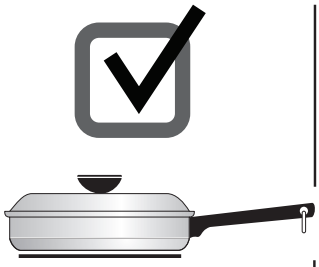

- Flat bottom and straight sides.
- Tight fitting lids.
- Weight of handle does not tilt pan. Pan is well balanced.
- Pan sizes match the amount of food to be prepared and the size of the surface element.
- Made of material that conducts heat well.
- Easy to clean.
- Always match pot diameter to element size.

- Curved and warped pans.

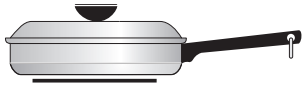

- Cookware larger than element by more than one-half inch or 12mm.

- Heavy handle tilts pan.

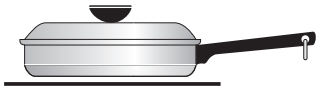

- Pan is much smaller than the element.

Figure 3: Proper cookware

Cookware Material Types

The cookware material determines how evenly and quickly heat is transferred from the surface element to the pan bottom. The most popular materials available are:

- **Aluminum** - Excellent heat conductor. Some types of food will cause it to darken (Anodized aluminum cookware resists staining and pitting).
- **Copper** - Excellent heat conductor but discolors easily (see Aluminum).
- **Stainless** - Slow heat conductor with uneven cooking results. Durable, easy to clean, and resists staining.
- **Cast Iron** - A slow heat conductor, but will retain heat very well. Cooks evenly once cooking temperature is reached.
- **Porcelain-enamel on metal** - Heating characteristics will vary depending on base material.
- **Glass** - Slow heat conductor.

IMPORTANT

Do not place empty aluminum, glass, or porcelain-enamel coated cookware on the element. The melting point of cookware made with these materials may be reached quickly, especially if left empty. If the cookware melts it will damage the cooktop. Follow all the cookware manufacturer’s recommendations for use and care of cookware.

IMPORTANT

NEVER place or straddle a cooking utensil over two different surface cooking areas at the same time. Incorrect use may damage the cooktop.

Install Burner Grates

To install burner grates, place the grates flat-side down and align them into the cooktop recess..

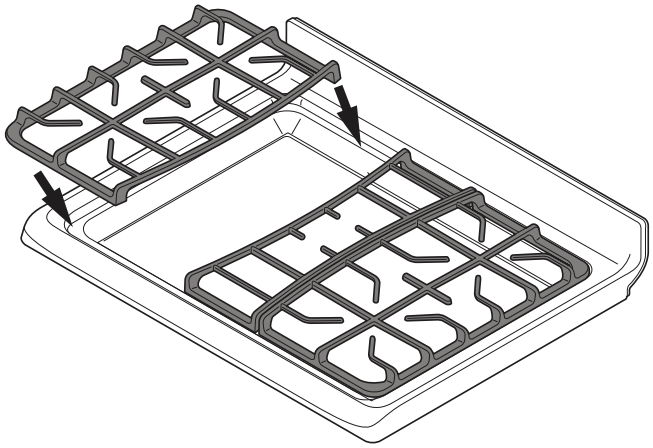

Figure 4: Grate installation

IMPORTANT

- Make sure the burner grates are properly placed on the cooktop before using the surface burners (Figure 4). The grates are designed to rest inside the recess on the cooktop.
- Grates should rest flush against each other and against the sides of the recess.
- Do not line the area underneath the grates or any part of the cooktop with aluminum foil or with any other lining.

Home Canning

Be sure to read and observe all the following points when home canning with your appliance. Check with the USDA (United States Department of Agriculture) website and be sure to read all the information they have available as well as follow their recommendations for home canning procedures.

- Use only a completely flat bottom canner with no ridges that radiate from the bottom center when home canning. Heat is spread more evenly when the bottom surface is flat. Use a straight-edge to check canner bottom.
- Make sure the diameter of the canner does not exceed 1 inch (25mm) beyond the surface element markings or burner.
- It is recommended to use smaller diameter canners on electric coil and ceramic glass cooktops and to center canners on the burner grates.
- Start with hot tap water to bring water to boil more quickly.
- Use the highest heat setting when first bringing the water to a boil. Once boiling is achieved, reduce heat to lowest possible setting to maintain that boil.
- Use tested recipes and follow instructions carefully. Check with your local Cooperative Agricultural Extension Service or a manufacturer of glass jars for the latest canning information.
- It is best to can small amounts and light loads.

Do not leave water bath or pressure canners on high heat for an extended amount of time.

Setting surface controls

The ability to heat food quickly and in large volumes increases as the burner size increases. Your gas appliance may be equipped with many different sized surface burners.

It is important to select cookware that is suitable for the amount and type of food being prepared. Select a burner and flame size appropriate for the cookware size.

- The standard size burner or burners may be used for most surface cooking needs.
- Small burners are best used for low-flame heating of small amounts of food.
- Large burners are best for bringing large quantities of liquid to temperature or heating larger quantities of food.

Setting a surface burner:

1. Place cooking utensil on center of surface burner grate. Be sure the cooking utensil rests stable on the burner grate.
2. Push the burner's surface control knob in and turn counterclockwise out of the OFF position (Figure 5).
3. Release the surface control knob and rotate to the LITE position (🔥). Visually check that the burner has a steady gas flame.
4. Once the surface burner has a flame, push the surface control knob in and turn counterclockwise to the desired flame size setting. Adjust the flame as needed using the knob markings.

CAUTION

Do not place flammable items such as plastic wrappings, spoon holders, or plastic salt and pepper shakers on the cooktop when it is in use. These items could melt or ignite. Potholders, towels, or wooden spoons could catch fire if placed too close to the surface burners.

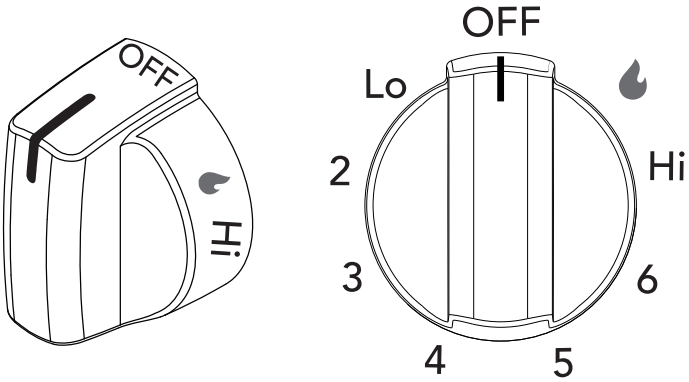

Figure 5: Surface control knob

NOTES

- When setting a surface control knob to the lite position, all of the electronic surface ignitors will spark at the same time. However, only the surface burner you are setting will ignite.
- In the event of an electrical power outage, the surface burners may be lit manually. To light a surface burner, hold a lit match to the burner head, then slowly turn the surface control knob to lite. Once the burner ignites, push in and turn knob out of lite then to the desired flame setting. Use caution when lighting surface burners manually.

Set proper burner flame size

The color of the flame is the key to proper burner adjustment. A good flame is clear, blue and hardly visible in a well-lighted room. Each cone of flame should be steady and sharp. Adjust or clean the burner if flame is yellow-orange.

For most cooking: start on the highest setting and then turn to a lower setting to complete the process. Use the recommendations below as a guide for determining proper flame size for various types of cooking (Table 1).

For deep fat frying: use a thermometer and adjust the surface knob accordingly. If the fat is too cool, the food will absorb the fat and be greasy. If the fat is too hot, the food will brown so quickly that the center will be under-cooked. Do not attempt to deep fat fry too much food at once as the food will neither brown nor cook properly.

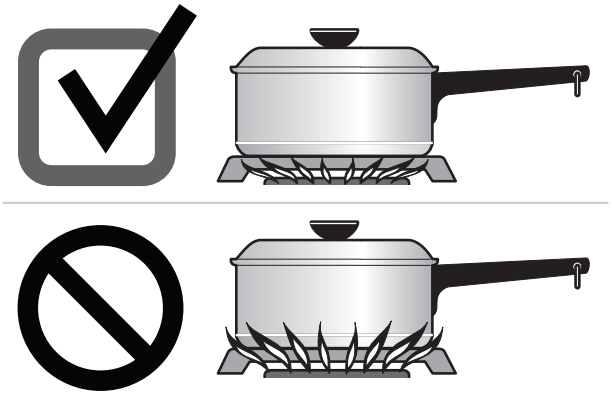

Figure 6: Proper burner flame

Flame size	Type of cooking
High flame	Start most foods; bring water to a boil; pan broiling
Medium flame	Maintain a slow boil; thicken sauces, gravies; steaming
Low flame	Keep foods cooking; poaching; stewing
These settings are based on medium-weight metal or aluminum pans with lids. Settings may vary when using other types of pans.	

Table 1: Recommended flame settings for cooking

CAUTION

Never extend the flame beyond the outer edge of the cooking utensil. A higher flame wastes energy, and increases your risk of being burned by the flame (Figure 6).

Cooking with a griddle (some models)

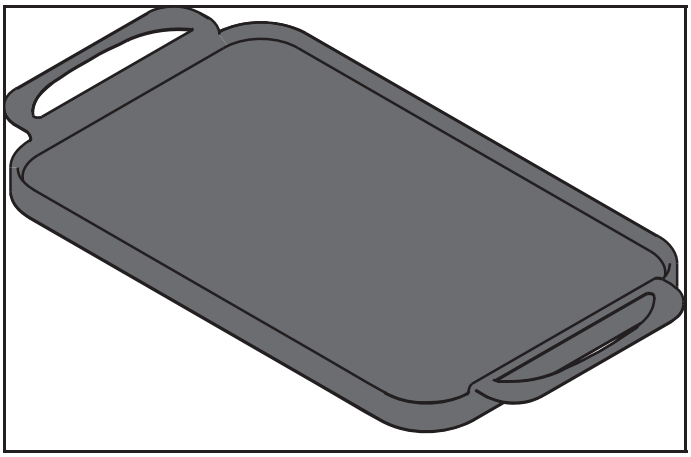

Figure 7: Griddle

The griddle is a versatile accessory that is perfect for cooking foods that require large flat surfaces such as pancakes, French toast, grilled sandwiches, bacon, and also for cooking different foods at the same time.

After use, let the griddle cool before washing. Hand wash with hot soapy water. Do not soak. Dry thoroughly. Do not put a griddle in a dishwasher.

If you would like to purchase a griddle, you can order one from Frigidaire.com.

Using the griddle:

Place the griddle securely on top of the burner grates. Preheat the griddle for 5 minutes on medium to medium low setting. Slow preheat ensures even heat distribution during the cooking process. DO NOT preheat the griddle on HI setting. Preheating on HI may warp the griddle and prevent even heat distribution.

Home Canning

Be sure to read and observe all the following points when home canning with your appliance. Check with the USDA (United States Department of Agriculture) ebsite and be sure to read all the information they have available as well as follow their recommendations for home canning procedures.

- Use only a completely flat bottom canner with no ridges that radiate from the bottom center when home canning. Heat is spread more evenly when the bottom surface is flat. Use a straight-edge to check canner bottom.
- Make sure the diameter of the canner does not exceed 1 inch (25mm) beyond the surface element markings or burner.
- It is recommended to use smaller diameter canners on electric coil and ceramic glass cooktops and to center canners on the burner grates.
- Start with hot tap water to bring water to boil more quickly.
- Use the highest heat setting when first bringing the water to a boil. Once boiling is achieved, reduce heat to lowest possible setting to maintain that boil.
- Use tested recipes and follow instructions carefully. Check with your local Cooperative Agricultural Extension Service or a manufacturer of glass jars for the latest canning information.
- It is best to can small amounts and light loads.

Do not leave water bath or pressure canners on high heat for an extended amount of time.

Oven Vent Location

The oven is vented as shown below. When the oven is on, warm air is released through the vent. This venting is necessary for proper air circulation in the oven and good baking results. Do not block oven vent. Never close off the openings with aluminium foil or any other material. Steam or moisture may appear near the oven vent. This is normal.

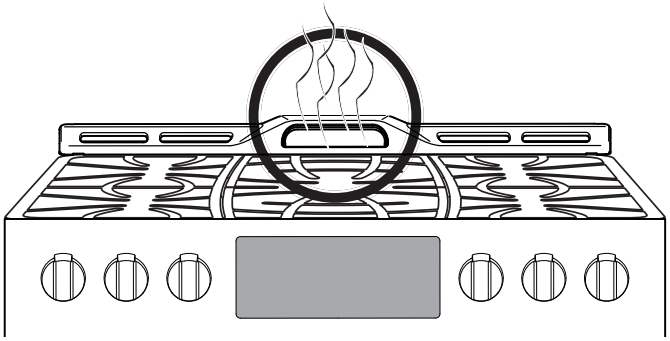

Figure 9: Oven vent

WARNING

Protective Liners — Do not use aluminum foil or any other material or liners to line the oven bottom, walls, racks or any other part of the range. Doing so will alter the heat distribution, produce poor baking results, and possibly cause permanent damage to the oven interior. Improper installation of these liners may result in risk of electric shock or fire. During self clean, temperatures in the oven will be hot enough to melt foil.

CAUTION

Always use pot holders or oven mitts when using the oven. When cooking, the oven interior, oven exterior, oven racks, and cooktop will become very hot which can cause burns.

Remove all oven racks before starting a self clean cycle. If oven racks are left inside the oven during a cleaning cycle, the slide ability of the oven racks may be damaged and all of the oven racks will lose their shiny finish.

To prevent possible damage to the oven, do not attempt to close the oven door until all the oven racks are fully positioned back inside the oven cavity.

Types of Oven Rack

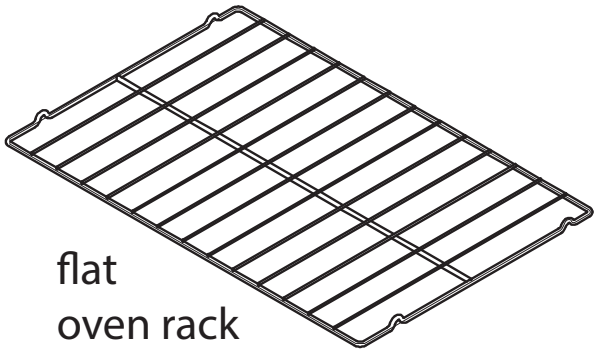

Figure 8: Oven rack types

Flat oven racks may be used for most cooking needs and may be placed in most oven rack positions.

Removing, Replacing, and Arranging Flat or Offset Oven Racks

Always arrange the oven racks when the oven is cool.

To **remove** - Pull the oven rack straight forward until it reaches the stop position. Lift up front of oven rack slightly and slide out.

To **replace** - Place the oven rack on the rack guides on both sides of oven walls. Tilt the front of oven rack upward slightly and slide the oven rack back into place. Be sure oven racks are level before using.

SETTING OVEN CONTROLS

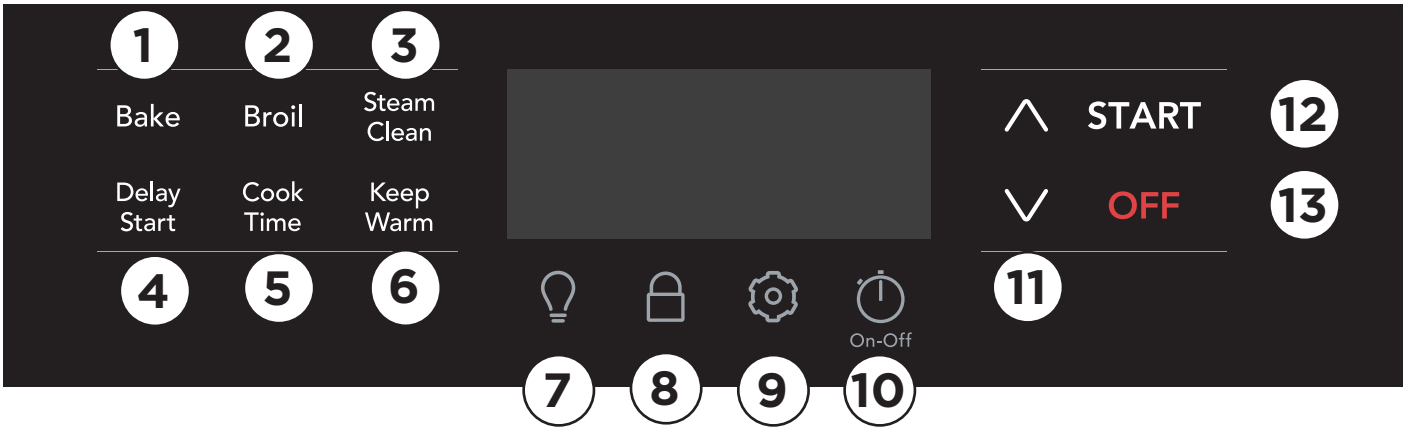

1. **Bake** is for delicate foods that need heat to rise and move gently in the oven.
2. **Broil** is for broiling and grilling foods under direct, high heat.
3. **Steam Clean** starts a steam cleaning cycle to loosen light soils.
4. **Delay Start** sets the oven to start after a specified period of time.
5. **Cook Time** sets the oven to turn off after running for a specified period of time.
6. **Keep Warm** Use to keep cooked foods at serving temperature in the oven.
7. **Oven Light** turns the interior light on and off at a touch and turns on automatically when oven door is open.
8. **Lockout** deactivates the control panel to prevent accidental key presses.
9. **Settings** is used to set user preferences for various control functions including:
   - **CLoC:** set clock to 12 or 24 hour mode.
   - **Hour:** change between the 12-hour energy saving feature or continuous bake.
   - **Aud:** set the volume of control keys or to operate in silent mode.
   - **F-C:** display temperatures in Fahrenheit or Celcius.
   - **rSEt:** reset all user preferences to original factory settings.
   - **uPo:** .adjust the oven temperature settings.
   - **E-SA:** .turn the 12-hour energy savings feature on or off.
10. **Timer On-Off** is used to set or cancel the minute timer.
11. **Up/Down Arrows** used to scroll to temperature and time settings.
12. **START** starts cooking functions and sets the clock.
13. **OFF** turns off all cooking functions.

Table 2: Oven Modes

Feature	Mode	Min.Temp/ Time	Max Temp/ Time
Bake		170°F (77°C)	550°F (288°C)
Broil		LO	HI
Keep Warm		140°F (60°C)	200°F (93°C) / 1 Hr.
Clock	12 Hr. 24 Hr.	1:00 Hr./Min. 0:00 Min	12:59 Hr./Min. 23:59 Hr./Min.
Timer On-Off		0:01 Min.	11:59 Hr./Min.
Note: An entry acceptance tone (1 beep) will sound each time a key is touched (the oven lock key is delayed 3 seconds). An entry error tone (3 short beeps) will sound if the entry of the temperature or time is below the minimum or above the maximum settings for the feature.			

Setting the Clock

When the appliance is first plugged in or when the power supply to the appliance has been interrupted, the display will flash 12:00. It is recommended to always set the clock for the correct time of day before using the appliance.

To set the clock:

1. Press ⚙.
2. Press the **Up** or **Down** arrow until “CLoC” appears in the display.
3. Press **START.**
4. Press the **Up** or **Down** arrow until the correct time appears in the display. You can press and hold the **Up** or **Down** arrow to change the time faster.
5. Press **START.**

NOTE: The clock cannot be changed when the oven is set for cooking or self clean is active.

Setting 12 Hour or 24 Hour display mode (Hour)

The clock display mode allows you to select 12 hr or 24 hr modes. The factory pre-set clock display mode is 12 hours.

To set 12 hr or 24 hr display mode:

1. Press ⚙.
2. Press the **Up** or **Down** arrow until “Hour” appears in the display.
3. Press **START.**
4. Press **UP or Down arrow** key to toggle between 12 hr and 24 hr setting.

5. Press **START** to accept the desired clock setting.

Setting a silent control panel (Aud)

When selecting a function, an audible tone is heard each time a key is pressed. If desired, the control can be programmed for silent operation.

To set the controls for silent operation:

1. Press ⚙.
1. Press the **Up** or **Down** arrow until “Aud” appears in the display.

2. Press the **Up** or **Down** arrow to toggle between “oFF” and “on”**.**

3. Press **START** to accept when the desired setting is displayed.

Display will return to the time of day.

Temperature display (F-C)

The electronic oven control is set to operate in Fahrenheit (°F) at the factory. You can change it to operate in Celcius (°C). The oven may be programmed for any temperature from 170°F to 550°F (77°C to 287°C).

To change the temperature to Celsius (°C) or from °C to °F:

1. Press ⚙.
2. Press Press the **Up** or **Down** arrow until until F-C appears.

3. Press **START.**
4. Press **Up and Down** arrows to toggle between F and C.

5. Press **START** to accept your choice.

Display will return to show the time of day.

Adjust Oven Temperature (UPO)

Your appliance has been factory calibrated and tested to ensure an accurate baking temperature. For the first few uses, follow your recipe times and temperature recommendations carefully. If you think the oven is cooking too hot or too cool for your recipe times, you can adjust the control so the oven cooks hotter or cooler than the temperature displayed.

Important: Do not use oven thermometers such as those found in grocery stores to check the temperature settings inside your oven. These oven thermometers may vary as much as 20 to 40 degrees from actual temperatures.

The oven temperature may be increased as much as +35°F (+19°C) or decreased -35°F (-19°C) from the factory calibrated settings.

To increase or decrease the oven temperature by 20°F:

1. Press ⚙.
2. Press the **Up** or **Down** arrow until “UPO” appears in the display.
3. Press **START**
4. Press the **Up** or **Down** arrow until the desired amount of temperature adjustment is shown.

   The oven temperature may be increased as much as +35°F or decreased -35°F from the factory calibrated settings.

   The oven temperature adjustment may be made if your oven control is set to display temperatures in °C (Celsius). Minimum and maximum settings for Celsius range from plus +19°C to minus -19°C.
5. Press **START** to accept change.

Important note:

- Oven temperature adjustments will not change the Broil, Self Clean, or Keep Warm temperatures.

Restore Factory Settings (rSEt)

Your appliance was set with predetermined (default) oven control settings. Over time, users may have made changes to these settings. The following options may have been modified since the appliance was new.

- 12 or 24 hr display mode
- Continuous bake or 12-hour energy savings mode
- Silent or audible controls
- Oven temperature display (Fahrenheit or Celsius)
- Oven temperature adjustments (UPO)

To restore oven control to factory default settings:

1. Press ⚙.
2. Press the **Up** or **Down** arrow until “rSEt” appears in the display.
3. Press and hold **START** for three seconds. The control has been reset with the default settings.

Continuous bake setting or 12-hour energy saving feature (E-SA)

The oven control has a built-in 12-hour energy saving feature that will shut off the oven if the oven is left on for more than 12 hours. The oven control can be prgrammed to override this feature for continuous baking.

To change the continuous bake setting:

1. Press ⚙.
2. Press the **Up** or **Down** arrow until “E-SA” appears in the display.
3. Press **START.**
4. Press the **Up** or **Down** arrow to toggle between “12Hr” and “Cont.
5. Press **START** to accept when the desired setting is displayed.

Setting the minute timer

The timer can be set for any amount of time from 1 minute to 11 hours and 59 minutes. The minute timer can be used alone or while using any of the other oven features. If another feature is active when the minute timer is active, the minute timer will show in the display. To view information about other active features, press the key for that feature.

Example: Setting timer for 15 minutes.

1. Press **Timer on-off** key:

2. Press **Up or Down** arrows until the desired time appears in the display. You can press and hold the **Up** or **Down** arrow to change the time faster.

3. Press **START.** The timer will begin to countdown. When the set time ends, the display will show **End.**

To turn the timer off at any time, press the **Timer on-off** key.

NOTE: The timer will beep three times and will continue to beep three times every minute until **Timer on-off** is pressed. The minute timer will not start or stop the cooking process.

Operating oven light

The interior oven light will automatically turn on when the oven door is opened.

Press the oven light key on the control panel to turn the interior oven light on and off whenever the oven door is closed.

NOTE: For best baking results, do not leave oven light on while baking.

The interior oven light is located at the upper left rear wall of the oven interior. To change the interior oven light, see “Replacing the oven light” in the Care & Cleaning section.

Oven Lock

The control can be programmed to lockout the oven control keys and lock the oven door.

To activate the lockout feature:

1. Press and hold the **lock key** for 3 seconds.
2. The door lock mechanism will lock the door in about 15 seconds. Do not attempt to open door while the mechanism is active.

To cancel the lockout feature:

1. Press and hold the **lock key** for 3 seconds.
2. The door lock mechanism will unlock the door in about 15 seconds. Do not attempt to open door while the mechanism is active.
3. When the lock icon no longer displays, the oven control keypad will be available for use.

NOTE: If a control key is pressed when Oven Lock is active, the control will triple beep indicating the key action is not available when the Oven Lock feature is active.

Setting Bake

Bake cooks with heat that rises from the oven bottom. The heat and air circulate naturally in the oven. A reminder tone will sound indicating when the set bake temperature is reached and to place the food in the oven. The convection fan will turn on in preheat and then cycle on and off as needed during baking.

Bake may be set for any oven temperature between 170°F (77°C) to 550°F (288°C)

CAUTION

Always use pot holders or oven mitts when using the oven. When cooking the oven interior, oven racks, and cooktop will become very hot which can cause burns.

Baking tips

- Fully preheat the oven before baking items like cookies, cakes, biscuits and breads.
- Use the convection bake function for best results when baking cookies on multiple racks.
- Bake is the best function to use for baking cakes.
- For best results when baking layer cakes using two oven racks, place racks in positions 3 and 5 and place pans as shown in.
- When using any single rack for baking cookies, cakes, biscuits, or muffins use rack position 3.
- Allow at least 2 inches (5 cm) of space between bakeware for proper air circulation.
- Dark or dull bakeware absorbs more heat than shiny bakeware, resulting in dark or over-browned foods. It may be necessary to reduce oven temperature or cook time to prevent over-browning of some foods.
- Dark pans are recommended for pies; shiny pans are recommended for cakes, cookies, and muffins.
- Do not open oven door often. Opening the door will reduce the temperature in the oven and may increase cook time.
- Do not leave oven light on while baking.

IMPORTANT

The oven will bake no longer than 12 hours. If you wish to bake for a longer period, see “Changing between continuous bake setting or 12 hour energy saving” on page 21 for detailed information.

To set Bake for (default) oven temperature of 350°F:

1. Press **Bake.** 350° will appear in the display.

2. Press **START.**

To cancel Bake at any time, press **OFF**.

To change the oven temperature to 425°F when the oven is baking:

1. Press **Up arrow** to scroll to new temperature of **4 2 5** and release arrow key.

2. Press **START.**

NOTE: If **START** is not pressed the temperature will revert to the previous setting.

To cancel Bake at any time, press **OFF**.

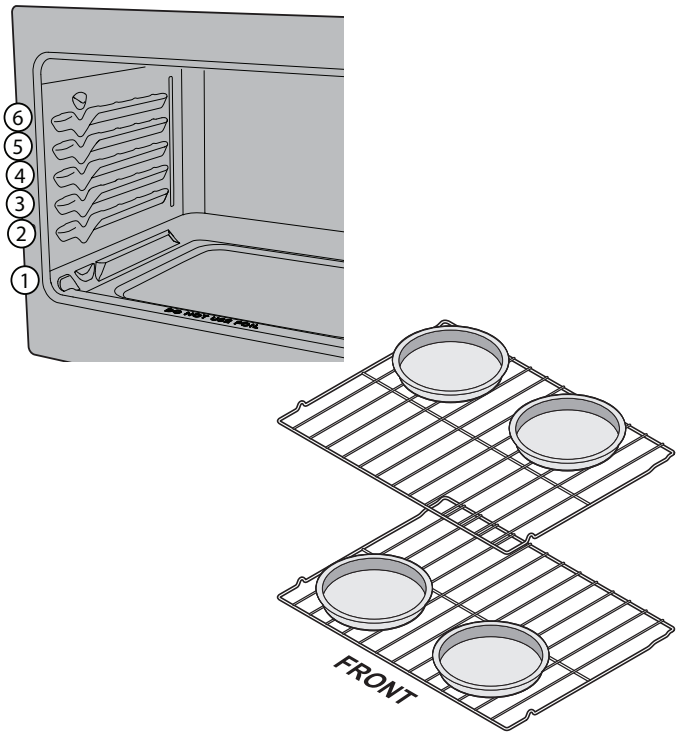

Setting Broil

Broiling is direct heat cooking and will produce some smoke. If smoke is excessive, place food further away from element. Always watch foods carefully to prevent burning.
When broiling, always remember to arrange the oven racks while oven is still cool. Position the rack on the highest level.

WARNING

Should an oven fire occur, leave the oven door closed and turn off the oven. If the fire continues, use a fire extinguisher. Do not put water or flour on the fire. Flour may be explosive and water can cause a grease fire to spread and cause personal injury.

CAUTION

Always use pot holders or oven mitts when using the oven. When cooking, the oven interior, oven racks, and cooktop will become very hot which can cause burns.

IMPORTANT

Broiler pans and inserts allow the grease to drain away from the high heat of the broiler. Do not use the pan without the insert. Do not cover the insert with foil – the exposed grease could ignite.

OPEN DOOR BROIL SHUTOFF: If the oven door is left open during Broil for more than 3 minutes, an alarm will sound to notify the user to close the oven door. If the door is not closed, the oven will turn off within 30 seconds of the open door alarm.

To set broil

1. Arrange the oven racks when cool.
2. Position bakeware in oven.
3. Press **Broil**. “HI” will show in the display.
4. Press **Up or Down** arrows to select **HI** or **Lo**.
5. Press **START**.
6. For optimum browning results, preheat oven for 2 minutes before adding food. Broil with oven door **closed.**
7. Broil on one side until food is browned; turn and broil other side until done to your satisfaction.
8. When finished broiling, press **OFF.**

To cancel broil at any time, press OFF.

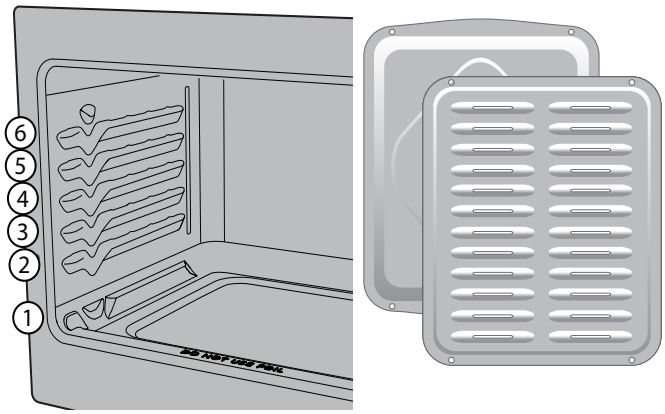

NOTE

If a broiler pan and insert are not supplied with this appliance they may be purchased from www.frigidaire.com

Important notes:

- Always arrange oven racks when the oven is cool.
- Broil with oven door closed. If broiling with door open, an alarm will sound alerting you to close the door. If left open, the Broil function will be canceled.
- For best results when broiling, use a broil pan with broil pan insert designed to drain the fat from the food and help avoid spatter and reduce smoking.
- When broiling, always pull the oven rack out to the stop position before turning or removing food.
- If a broiler pan and insert are not supplied with this appliance they may be purchased from www.frigidaire.com.

Steam Clean

The Steam Clean feature offers a chemical free and time saving method to assist in the routine cleaning of small and light soils. For heavier baked on soils use the Self Clean feature.

CAUTION

Do not add bleach, ammonia, oven cleaner, or any other abrasive household cleaners to the water used for Steam Clean.

Before cleaning any part of the oven, be sure all controls are turned off and the oven is cool. The oven may be hot and can cause burns.

Be sure the oven is level and cool before starting Steam Clean. If the oven temperature is above room temperature a triple beep will be heard and the function will not start. Steam Clean produces best results when started with a cool oven.

To set a Steam Clean cycle:

1. Remove all racks and oven accessories.
2. Scrape or wipe loose debris and grease from the oven bottom.
3. Pour 1 cup of tap water onto the oven bottom. Close oven door.
4. Press **Steam Clean.**

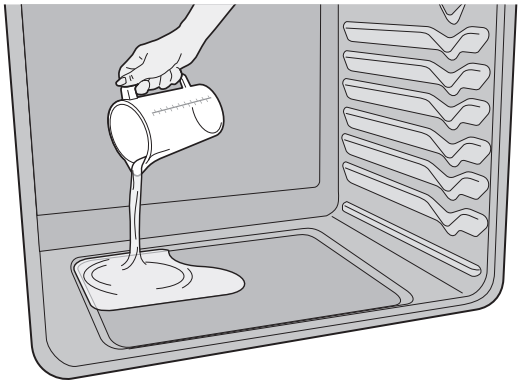

Figure 10: Add 1 cups of tap water

5. Touch **START**.
6. The time the Steam Clean cycle will end is shown in the display. Do not open the door during this time. If door is open while in Steam Clean (d-O) will appear in the display.
7. When the steam clean cycle is complete an alert will sound and the Off message will show in the display. Press off to return to the clock.
8. Take care opening the door when the steam clean is finished. Stand to the side of the oven out of the way of escaping vapor.
9. Wipe oven cavity and bottom. Do not clean oven door gasket (Figure 11). Avoid leaning or resting on the oven door glass while cleaning cavity.

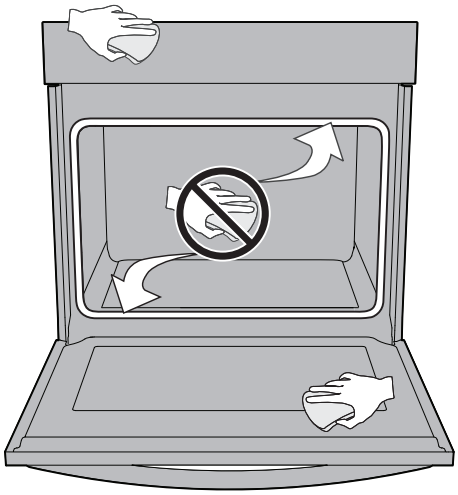

Figure 11: Clean around the oven door gasket

Notes:

- Opening the oven door during the steam clean cycle prevents the water from reaching the temperature needed to clean.
- For best results, clean oven immediately after the cycle is complete. Steam clean works best for soils on the oven bottom.
- A non-abrasive scouring pad, stainless steel sponge, plastic scraper, or eraser style cleaning pad (without cleaner) can be used for difficult soils. Moisten pads with water before use.
- Place a paper towel or cloth in front of the oven to capture any water that may spill while wiping out.
- Do not leave the residual water in the oven for any length of time.
- Some condensation or water vapor may appear close to the oven vent and the oven door glass. This is normal. The oven gasket may become damp; do not wipe dry.
- Local water sources often contain minerals (hard water). If hard water deposits occur, wipe cavity with a 50/50 solution of water and vinegar or 50/50 solution of lemon juice and water.
- Steam clean cannot be programmed with a delayed start time.

Cook Time

Use Cook Time to set the amount of time needed for most oven functions. The oven will turn on immediately (or after a specified delay) and stop automatically after the set cook time ends.

To set Cook Time:

1. Press **Cook Time**. The display will show a time of 0:00 (0 hours and 00 minutes).
2. Press **Up or Down** arrows until the desired time for cooking shows in the display. You can press and hold the **Up** or **Down** arrow to change the time faster.
3. Press **START.** The timer will start counting down.
4. When the time runs out, the display will show “End” and the oven will turn off.

To turn off the oven before the time runs out, press **OFF**.

Delay Start

Delay Start allows a delayed starting time only for the Bake function. Prior to setting a delay start, be sure the time of day is set correctly. The maximum delay for a Delay Start is one hour.

To set Cook Time:

1. Choose the Bake and set the temperature.
2. Set a Cook Time if desired.
3. Press **Delay Start**. The display will show a time of 0:00 (0 hours and 00 minutes).
4. Press **Up or Down** arrows until the desired time delay shows in the display. You can press and hold the **Up** or **Down** arrow to change the time faster.
5. Press **START.** The timer will start counting down.
6. When the time runs out, the chosen cooking function will start. If a Cook Time was set, the remaining cook time will show in the display.

To stop the Delay Start timer at any time, press **OFF**.

Keep Warm

Keep Warm should only be used with foods that are fully cooked and at serving temperatures. Keep Warm will keep foods warm and ready for serving at 170° F (77°C). If needed, arrange oven racks and place cooked food in oven.

To set Keep Warm:

1. Press **Keep Warm**: (If no other keys are touched within 25 seconds the request for Warm will clear.)

2. Press **START.** Keep Warm will automatically turn on and remain on for 3 hours or until cancelled.

To turn off Keep Warm at any time, press **OFF**.

Remove spills and any heavy soiling as soon as possible. Regular cleaning will reduce the difficulty of major cleaning later.

CAUTION

Before cleaning any part of the appliance, be sure all controls are turned off and the appliance is cool.

If ammonia or appliance cleaners are used, they must be removed and the appliance must be thoroughly rinsed before operating. Follow manufacturer's instructions and provide adequate ventilation.

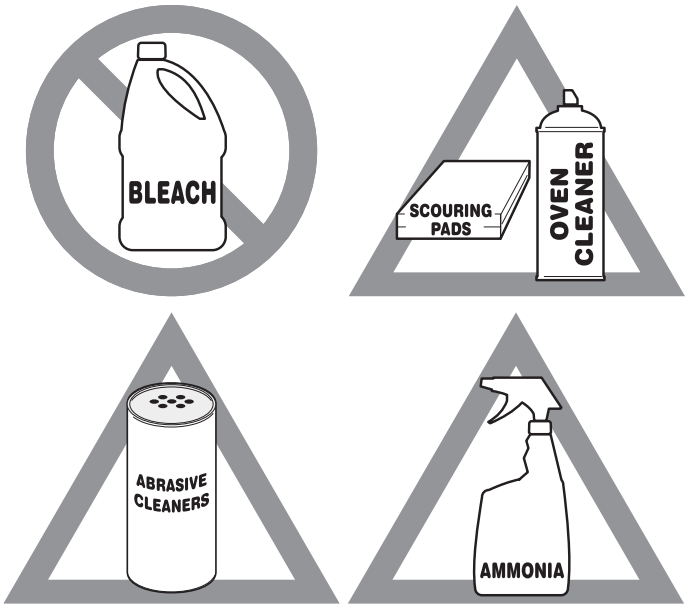

Figure 12: Use cleaners with caution

Surface or Area	Cleaning Recommendation
Aluminum and vinyl	Using a soft cloth, clean with mild dish detergent and water. Rinse with clean water, dry and polish with a soft, clean cloth.
Painted and plastic control knobs Painted body parts Painted decorative trims	Using a soft cloth, clean with mild dish detergent and water or a 50/50 solution of vinegar and water. Rinse with clean water, dry and polish with a soft, clean cloth. Glass cleaners may be used, but do not apply directly to surface; spray onto cloth and wipe.
Control panel	Using a soft cloth, clean with mild dish detergent and water or a 50/50 solution of vinegar and water. Do not spray liquids directly on the oven control and display area. Do not use large amounts of water on the control panel - excess water on the control area may cause damage to the appliance. Do not use other liquid cleaners, abrasive cleaners, scouring pads, or paper towels - they will damage the finish.
Control knobs	Using a soft cloth, clean with mild dish detergent and water or a 50/50 solution of vinegar and water. To remove control knobs: turn to the OFF position, grasp firmly, and pull off the shaft. To replace knobs after cleaning, line up the OFF markings and push the knobs into place.
Stainless Steel	Using a soft cloth, clean with mild dish detergent and water or a 50/50 solution of vinegar and water. Rinse with clean water, dry with a soft clean cloth. Do not use cleaners containing abrasives, chlorides, chlorine, or ammonia.
Smudge Proof™ Stainless Steel Black Stainless Steel	Using a soft cloth, clean with mild dish detergent and water or a 50/50 solution of vinegar and water. Rinse with clean water, dry with a soft clean cloth. Do not use appliance cleaner, stainless steel cleaner, or cleaner containing abrasives, chlorides, chlorine, or ammonia. These cleaners may damage the finish.

Surface or Area	Cleaning Recommendation
Porcelain-enameled broiler pan and insert Porcelain door liner Porcelain body parts	Rinse with clean water and a damp cloth. Scrub gently with a soapy, non-abrasive scouring pad to remove most spots. Rinse with a 50/50 solution of clean water and ammonia. If necessary, cover difficult spots with an ammonia-soaked paper towel for 30 to 40 minutes. Rinse and wipe dry with a clean cloth. Remove all cleaners or future heating could damage the porcelain. Do not allow food spills with a high sugar or acid content (milk, tomatoes, sauerkraut, fruit juices or pie filling) to remain on porcelain surfaces. These spills may cause a dull spot even after cleaning.
Manual clean oven interior	The oven interior is porcelain coated and safe to clean using oven cleaners. Always follow manufacturer's instructions for cleaners. After cleaning, remove any oven cleaner or the porcelain may become damaged during future heating. Do not spray oven cleaner on any electrical controls or switches. Do not spray or allow oven cleaner to build up on the oven temperature sensing probe. Do not spray cleaner on oven door trim, door gasket, plastic drawer glides, handles or any exterior surfaces of the appliance.
Self-cleaning oven interior	Before setting a self-clean cycle, clean soils from the oven frame, areas outside the oven door gasket, and the small area at the front center of the oven bottom. See “Self Clean” on page 23.
Oven door	Use mild dish detergent and water or a 50/50 solution of vinegar and water to clean the top, sides, and front of the oven door. Rinse well. Glass cleaner may be used on the outside glass of the door. Ceramic smoothtop cleaner or polish may be used on the interior door glass. Do not immerse the door in water. Do not spray or allow water or cleaners to enter the door vents. Do not use oven cleaners, cleaning powders, or any harsh abrasive cleaning materials on the outside of the oven door. Do not clean the oven door gasket. The oven door gasket is made of a woven material which is essential for a good seal. Do not rub, damage, or remove this gasket.
Gas cooktop surface burners	See “Cleaning the sealed burners” on page 22.
Gas cooktop surface grates Gas cooktop burner caps	Use a non-abrasive plastic scrubbing pad and mild abrasive cleanser. Do not allow food spills with a high sugar or acid content (milk, tomatoes, sauerkraut, fruit juices or pie filling) to remain on the burner grates or burner caps. These spills may cause a dull spot even after cleaning. Clean these spills as soon as surfaces are cool. Thoroughly dry immediately following cleaning.

Cleaning the surface burners

To avoid possible burns, do not attempt cleaning before turning off all surface burners and allowing them to cool.

Any additions, changes, or conversions required in order for this appliance to satisfactorily meet the application needs must be made by an authorized qualified Agency. Routinely clean the cooktop. Wipe with a clean, damp cloth and wipe dry to avoid scratches. Keeping the surface burner head ports and slots clean will prevent improper ignition and an uneven flame.

To clean recessed and contoured areas of cooktop:

- If a spill occurs on or in the recessed or contoured areas, blot up spill with an absorbent cloth.
- Rinse with a clean, damp cloth and wipe dry.

CAUTION

To avoid possible burns do not attempt to operate the surface burners without the burner caps.

Do not use spray oven cleaner on the cooktop.

To clean burner heads:

1. Remove the burner cap and the burner head (see Figure 13). Clean with hot soapy water and dry thoroughly
2. For burned-on and dried spills, apply hot soapy water to the burner head. Allow time for the soils to soften.
3. Use a toothbrush to clean all over the burner head.
4. Use a needle or fine wire to clean out the flame ports.
5. Wipe the burner head clean with a soft, clean cloth, sponge, or scratch-free cleaning pad.
6. Before using the cooktop again, make sure the burner head has fully seated back into place and the burner cap is properly seated on the burner heads. You can wiggle the cap to test placement, neither the cap nor the head should slide out of position (see “Assembly of the burner caps” on page 8).

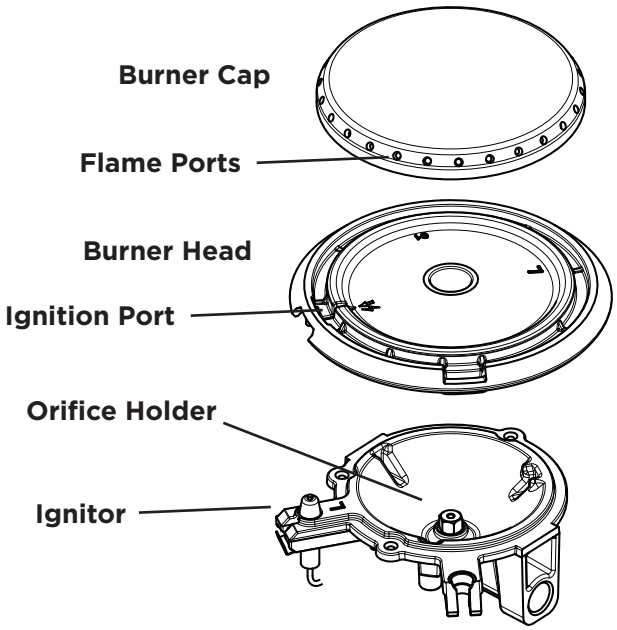

Figure 13: Burner cap, burner head, ignitor, and orifice

Important notes:

- Always keep the surface burner caps in place whenever a surface burner is in use.
- When replacing the burner caps, be sure the burner caps are seated firmly on top of the burner heads.
- For proper flow of gas and ignition of burners do not allow spills, food, cleaning agents, or any other material to enter the gas orifice port opening.

General Cleaning

Refer to the table at the beginning of this chapter for more information about cleaning specific parts of the oven.

Follow these cleaning precautions:

- Allow the oven to cool before cleaning.
- Wear rubber gloves when cleaning the appliance manually.

Remove soils using hot, soapy water. Do not allow food spills with a high sugar or acid content (such as milk, tomatoes, sauerkraut, fruit juices or pie filling) to remain on the surface as they may cause a dull spot even after cleaning. Remove spillovers and heavy soiling as soon as possible. Regular cleaning will reduce the effort required for major cleaning later.

CAUTION

Before manually cleaning any part of the oven, be sure all controls are turned off and the oven is cool. The oven may be hot and can cause burns.

Remove all racks and accessories from the oven before cleaning.

Ammonia must be rinsed before operating the oven. Provide adequate ventilation.

Cleaning Porcelain Enamel Oven

To remove heavy soil:

1. Allow a dish of ammonia to sit in the oven overnight or for several hours with the oven door closed. Clean softened dirt spots using hot, soapy water. Rinse well with water and a clean cloth.
2. If soil remains, use a nonabrasive scouring pad or a nonabrasive cleaner. If necessary, use an oven cleaner following manufacturer's instructions. Do not mix ammonia with other cleaners.
3. Clean any soil from the oven frame, the door liner outside the oven door gasket and the small area at the front center of the oven bottom. Clean with hot, soapy water. Rinse well using clean water and a cloth.

Aluminum Foil, Aluminum Utensils, and Oven Liners

WARNING

Never cover any slots, holes, or passages in the oven bottom or cover an entire oven rack with materials such as aluminum foil. Doing so blocks air flow through the oven and may cause carbon monoxide poisoning. Aluminum foil linings may trap heat, causing a fire hazard.

- Protective liners—Do not use aluminum foil to line the oven bottom. The high heat of the oven can melt these materials to the oven cavity and ruin the oven. These types of materials can also reduce the effectiveness of the air circulation in the oven and produce poor baking results. Only use aluminum foil as recommended in this manual. Improper installation of these liners may result in risk of electric shock or fire.
- Aluminum utensils - The melting point of aluminum is much lower than that of other metals. Care must be taken when aluminum pots or pans are used.
- Oven racks - Do not use aluminum foil to cover the oven racks. Using a liner in the oven restricts the heat and air flow needed to obtain the best possible cooking results for any oven.

Replacing the Oven Light

CAUTION

Be sure the oven is unplugged and all parts are cool before replacing the oven light.

The interior oven light is located at the rear of the oven cavity and is covered by a glass shield. The glass shield must be in place whenever the oven is in use.

To replace the oven interior light bulb:

1. Turn electrical power off at the main source or unplug the appliance.
2. Remove interior oven light shield by turning a quarter turn counter-clockwise.
3. Replace bulb with a new T-4 type Halogen 25 watt appliance bulb.

NOTE

Wear a cotton glove or use a paper towel when installing a new bulb. Do not touch the new bulb with your fingers when replacing. This will shorten the life of the bulb.

4. Replace glass oven light shield by rotating clockwise.
5. Turn power back on again at the main source (or plug the appliance back in).
6. Be sure to reset the time of day on the clock.

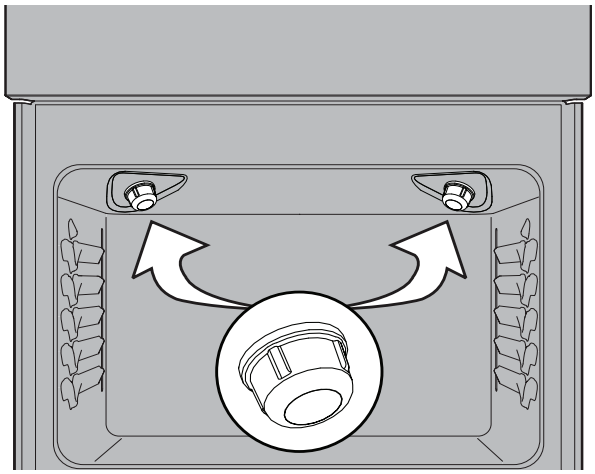

Figure 14: Oven Halogen light

Removing and Replacing the Oven Door

CAUTION

The door is heavy. For safe, temporary storage, lay the door flat with the inside of the door facing down.

IMPORTANT

Special door care instructions - For safe, temporary storage, lay the door flat with the inside of the door facing down.

Most oven doors contain glass that can break. Do not hit the glass with pots, pans, or any other object. Scratching, hitting, jarring, or stressing the glass may weaken its structure, causing an increased risk of breakage at a later time. Do not close the oven door until all of the oven racks are fully in place.

To remove the oven door:

1. Open oven door completely, horizontal with floor (Figure 15).
2. Pull up the lock located on each hinge support toward front of the oven until the lock stops. You may have to apply a little upward pressure on the lock to pull it up (Figure 16).
3. Grasp the door by the sides, and close the door until the door frame makes contact with the unlocked hinges (Figure 17).
4. Pull the bottom of the door toward you while rotating the top of the door toward the appliance to completely disengage the hinge levers (Figure 18).

To replace the oven door:

1. Firmly grasp both sides of oven door along the door sides. Do not use the oven door handle (Figure 18).
2. Hold the oven door at the same angle as the removal position (Figure 17) Carefully insert the hinge levers into the oven frame until you feel the hinge levers are seated into the hinge notches. The hinge arms must be fully seated into the hinge notches before the oven door can be fully opened.
3. Fully open the oven door, horizontal with floor (Figure 15).
4. Push the door hinge locks up toward and into the oven frame on both left and right oven door hinges to the locked position (Figure 16).
5. Close the oven door.

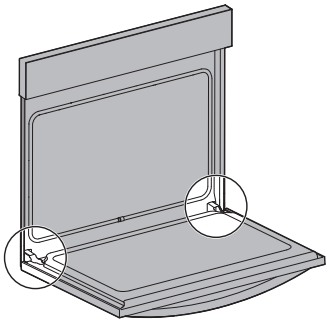

Figure 15: Door hinge location

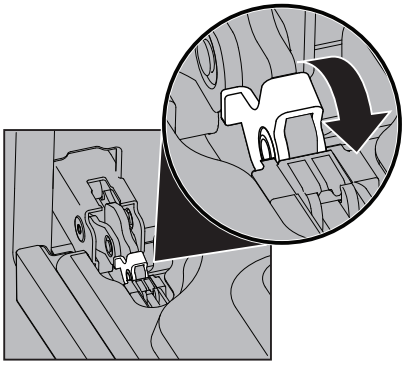

Figure 16: Door hinge lock

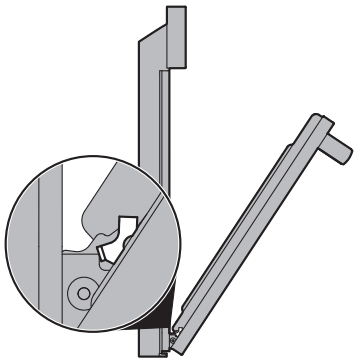

Figure 17: Removal position

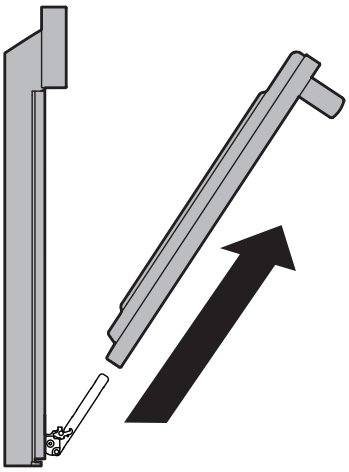

Figure 18: Remove door

Oven Baking

For best cooking results, preheat the oven before baking cookies, breads, cakes, pies, pastries, etc. There is no need to preheat the oven for roasting meat or baking casseroles. The cooking times and temperatures needed to bake a product may vary slightly from your previously owned appliance.

Baking Problems and Solutions Baking Problems		
Baking Problems	**Causes**	**Corrections**
Cookies and biscuits burn on the bottom.	Cookies and biscuits put into oven before oven is preheated.	Allow oven to preheat to desired temperature before placing food in oven. Choose pan sizes that will permit at least 2” of air space
Cakes too dark on top or bottom 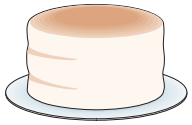	Cakes put in oven before oven is preheated. Rack position too high or too low. Oven too hot.	Allow oven to preheat to the selected temperature before placing food in the oven. Use proper rack position for baking needs. Set oven temperature 25°F (13°C) lower than recommended.
Cakes not done in center 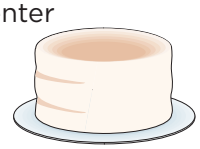	Oven too hot. Incorrect pan size. Pan not centered in oven. Glass cookware slow heat conductor.	Set oven temperature 25°F (13°C) lower than recommended. Use pan size suggested in recipe. Use proper rack position and place pan so there are at least 2” (5.1 cm) of space on all sides of pan. Reduce temperature and increase cook time or use shiny bakeware.
Cakes not level.	Oven not level. Pan too close to oven wall or rack overcrowded. Pan warped. Oven light left on while baking.	Place a marked glass measuring cup filled with water on the center of the oven rack. If the water level is uneven, refer to the installation instructions for leveling the oven. Use proper rack position and place pan so there are at least 2” (5.1 cm) of space on all sides of pan. Do not use pans that are dented or warped. Do not leave the oven light on while baking.
Foods not done when cooking time is over. 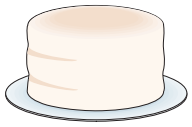	Oven too cool. Oven overcrowded. Oven door opened too frequently.	Set oven temperature 25°F (13°C) higher than suggested and bake for the recommended time. Be sure to remove all pans from the oven except the ones to be used for baking. Open oven door only after the shortest recommended baking time.

BEFORE YOU CALL

Let us help you troubleshoot your concern! This section will help you with common issues. If you need us, visit our website, chat with an agent, or call us. We may be able to help you avoid a service visit. If you do need service, we can get that started for you!

1-800-374-4432 (United States)
Frigidaire.com

1-800-265-8352 (Canada)
Frigidaire.ca

Problem	Cause / Solution
Entire appliance does not operate	Appliance not connected. Make sure power cord is plugged properly into outlet. Check your fuse box or breaker box to make sure the circuit is active. Electrical power outage. Check house lights to be sure. Call your local electric company for service outage information.

Oven Problems	
Problem	**Cause / Solution**
Poor baking results.	Many factors affect baking results. Use proper oven rack position. Center food in the oven and space pans to allow air to circulate. Preheat the oven to the set temperature before placing food in the oven. Try adjusting the recipe's recommended temperature or baking time. See “Adjusting the Oven Temperature” on page 26 if you feel the oven is too hot or too cool.
Flames inside oven or smoking from oven vent.	Excessive spills in oven. Grease or food spilled onto the oven bottom or oven cavity. Wipe up excessive spills before starting the oven. If flames or excessive smoke are present when using broil, see “Using the Broil Feature” on page 22.
Oven smokes excessively when broiling.	Incorrect setting. Follow the “Using the Broil Feature” instructions on page 22. Meat too close to the broil element or burner. Reposition the broil pan to provide proper clearance between the meat and broil element or burner. Remove excess fat from meat. Cut remaining fatty edges to prevent curling, but do not cut into lean. Grease build up on oven surfaces. Regular cleaning is necessary when broiling frequently. Grease or food splatters will cause excessive smoking.
Oven control panel beeps and displays any F or E code error.	Oven control has detected a fault or error condition. To clear the error, press the OFF key on the control panel. Once the error code is cleared, try the bake or broil function. If the F or E code error repeats, turn off the power to appliance, wait 5 minutes, and then repower the appliance. Set the clock with correct time of day. Try the bake or broil function again. If the fault recurs, press the OFF key to clear.
Oven portion of appliance does not operate.	Be sure the regulator gas valve is turned to ON. See installation instructions. The time of day is not set. The clock must be set in order to operate the oven. See “Setting Clock” on page 15. Be sure the oven controls are set properly for the desired function. See “Oven Control Features” starting on page 14 and review instructions for the desired cooking function in this manual or see “Entire appliance does not operate.” in this checklist.
Convection fan does not rotate.	Oven door is open. The convection fan will turn off if the oven door is opened when convection is active. Close the oven door. On gas models, the convection fan will begin to rotate about 6 minutes into the preheating process.

Cooktop Problems	
Problem	**Cause / Solution**
Surface burners do not ignite.	Surface control knob was not completely turned to LITE (). Push in and turn the surface control knob to LITE until the burner ignites and then turn the control knob to the desired flame size. Burner ports are clogged. With the burner OFF and cool, use a small-gauge wire or needle to clean the burner head slots and ignition ports. See“Cleaning the Cooktop and Surface Burners” in the Care & Cleaning section on page 25 for additional cleaning instructions. Range power cord is disconnected from outlet (electric ignition models only). Be sure the power cord is securely plugged into the power outlet. Circuit is broken. Check breaker box or fuse box. Electrical power outage. Burners may be lit manually. See “Setting Surface Burners” on page 13.
Surface burner flame uneven or only part way around burner cap.	Burner slots or ports are clogged. With the surface burner OFF and cool, clean ports with a small-gauge wire or needle. If moisture is present after cleaning, lightly fan the flame and allow the burner to operate until flame is full. Burner caps are not seated properly. Check that all burner caps are level and seated correctly on the burner heads. See“Cleaning the Cooktop and Surface Burners” in the Care & Cleaning section on page 25 for additional cleaning instructions.
Surface burner flame is too high.	Surface control knob is set too high. Adjust to a lower flame setting. Burner caps are not seated properly. Check that all surface burner caps are level and seated correctly on the surface burner heads. See“Cleaning the Cooktop and Surface Burners” in the Care & Cleaning section on page 25 for additional cleaning instructions. Incorrect L.P. conversion. Refer to L.P. conversion kit instructions to correct.
Surface burner flame is orange.	Dust particles in main gas line. Allow the burner to operate a few minutes until flame turns blue. In coastal areas, a slightly orange flame is unavoidable due to salt content in the air. Incorrect L.P. conversion. Refer to L.P. conversion kit instructions to correct.

Other Problems	
Problem	**Cause / Solution**
Appliance is not level.	Be sure the floor is level, strong, and stable enough to adequately support the range. If the floor is sagging or sloping, contact a carpenter to correct the situation. Poor installation. Place the oven rack in the center of the oven. Place a level on the oven rack. Adjust the leveling legs at the base of the appliance until the rack is level. Kitchen cabinet alignment may make range appear not level. Be sure cabinets are square and have sufficient room for appliance clearance.
Cannot move appliance easily. Appliance must be accessible for service.	Cabinets not square or are built in too tightly. Contact the builder or installer to make the appliance accessible. Carpet interferes with appliance. Provide sufficient space so the appliance can be lifted over carpet. Installation over carpet is not advised. See the installation instructions for guidelines specific to your appliance.
Oven light does not work.	Be sure the oven light is secure in the socket. See “Replacing the Oven Light” on page 26.

QUEBEC RIGHT TO REPAIR

Though Frigidaire makes every effort to make replacement parts, repair services and information necessary to maintain or repair our products available to consumers, parts, service and information are not guaranteed, pursuant to section 39 of the Consumer Protection Act, CQLR, c. P- 40.1 and sections 79.18 to 79.20 of Regulation respecting the application of the Consumer Protection Act, CQLR, c P-40.1, r. 3.

Your appliance is covered by a one year limited warranty. For one year from your original date of purchase, Electrolux will pay all costs for repairing or replacing any parts of this appliance that prove to be defective in materials or workmanship when such appliance is installed, used and maintained in accordance with the provided instructions.

Exclusions

This warranty does not cover the following:

1. Products with original serial numbers that have been removed, altered or cannot be readily determined.
2. Product that has been transferred from its original owner to another party or removed outside the USA or Canada.
3. Rust on the interior or exterior of the unit.
4. Products purchased “as-is” are not covered by this warranty.
5. Food loss due to any refrigerator or freezer failures.
6. Products used in a commercial setting.
7. Service calls which do not involve malfunction or defects in materials or workmanship, or for appliances not in ordinary household use or used other than in accordance with the provided instructions.
8. Service calls to correct the installation of your appliance or to instruct you how to use your appliance.
9. Expenses for making the appliance accessible for servicing, such as removal of trim, cupboards, shelves, etc., which are not a part of the appliance when it is shipped from the factory.
10. Service calls to repair or replace appliance light bulbs, air filters, water filters, other consumables, or knobs, handles, or other cosmetic parts.
11. Surcharges including, but not limited to, any after hour, weekend, or holiday service calls, tolls, ferry trip charges, or mileage expense for service calls to remote areas, including the state of Alaska.
12. Damages to the finish of appliance or home incurred during installation, including but not limited to floors, cabinets, walls, etc.
13. Damages caused by: services performed by unauthorized service companies; use of parts other than genuine Electrolux parts or parts obtained from persons other than authorized service companies; or external causes such as abuse, misuse, inadequate power supply, accidents, fires, or acts of God.

DISCLAIMER OF IMPLIED WARRANTIES; LIMITATION OF REMEDIES

CUSTOMER’S SOLE AND EXCLUSIVE REMEDY UNDER THIS LIMITED WARRANTY SHALL BE PRODUCT REPAIR OR REPLACEMENT AS PROVIDED HEREIN. CLAIMS BASED ON IMPLIED WARRANTIES, INCLUDING WARRANTIES OF MERCHANTABILITY OR FITNESS FOR A PARTICULAR PURPOSE, ARE LIMITED TO ONE YEAR OR THE SHORTEST PERIOD ALLOWED BY LAW, BUT NOT LESS THAN ONE YEAR. ELECTROLUX SHALL NOT BE LIABLE FOR CONSEQUENTIAL OR INCIDENTAL DAMAGES SUCH AS PROPERTY DAMAGE AND INCIDENTAL EXPENSES RESULTING FROM ANY BREACH OF THIS WRITTEN LIMITED WARRANTY OR ANY IMPLIED WARRANTY. SOME STATES AND PROVINCES DO NOT ALLOW THE EXCLUSION OR LIMITATION OF INCIDENTAL OR CONSEQUENTIAL DAMAGES, OR LIMITATIONS ON THE DURATION OF IMPLIED WARRANTIES, SO THESE LIMITATIONS OR EXCLUSIONS MAY NOT APPLY TO YOU. THIS WRITTEN WARRANTY GIVES YOU SPECIFIC LEGAL RIGHTS. YOU MAY ALSO HAVE OTHER RIGHTS THAT VARY FROM STATE TO STATE.

If You Need Service

Keep your receipt, delivery slip, or some other appropriate payment record to establish the warranty period should service be required. If service is performed, it is in your best interest to obtain and keep all receipts. Service under this warranty must be obtained by contacting Electrolux at the addresses or phone numbers below.

This warranty only applies in the USA and Canada. In the USA, your appliance is warranted by Electrolux Major Appliances North America, a division of Electrolux Home Products, Inc. In Canada, your appliance is warranted by Electrolux Canada Corp. Electrolux authorizes no person to change or add to any obligations under this warranty. Obligations for service and parts under this warranty must be performed by Electrolux or an authorized service company. Product features or specifications as described or illustrated are subject to change without notice.

USA
1-800-374-4432
Frigidaire
10200 David Taylor Drive
Charlotte, NC 28262

FRIGIDAIRE

Canada
1.800.265.8352
Electrolux Canada Corp.
5855 Terry Fox Way
Mississauga, Ontario, Canada
L5V 3E4

FRIGIDAIRE

welcome home

Our home is your home. Visit us if you need help with any of these things:

- owner support
- accessories
- service
- registration

(See your registration card for more information.)

Frigidaire.com
1-800-374-4432

Frigidaire.ca
1-800-265-8352