Electrolux

electrolux.com/register

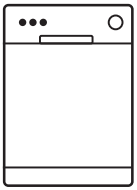

EN User Manual | **Dishwasher**

TABLE OF CONTENTS

Important Safety Instructions.....2
Product Registration 3
Features at a Glance.....4
Operating Instructions 5
Preparing and Loading Dishes 7
Detergent and Rinse Aid Dispenser.....10
Care and Cleaning 12
Before You Call 14
Major Appliance Warranty 17
Right To Repair 18

IMPORTANT SAFETY INSTRUCTIONS



SAVE THESE INSTRUCTIONS

WARNING

For your safety, please follow the information in this manual to minimize the risk of fire, explosion, electric shock, and to help prevent property damage or personal injury.

Proper Installation

Please read the Installation Instructions carefully and follow all instructions when installing the dishwasher.

- This manual does not cover every possible condition and situation that may occur. Use common sense and caution when installing, operating and maintaining any appliance.
- Water supply inlet temperature should be between 120°F (48.9°C) and 135°F (57.2°C).
- Dispose of the discarded appliance and packing material properly.
- The dishwasher must be properly grounded, or it can result in a risk of electric shock. See Installation Instructions for details.
- If there is any damage to the dishwasher, please contact to your Dealer, do not attempt to repair or replace any part by yourself.

Basic Precautions Before Use

- Read all instructions before using the dishwasher.
- The manual does not cover every possible condition and situation that may occur.

Use the dishwasher only for intended function as described in this manual. When loading items to be washed:

- Load sharp items and knives so that they are not likely to damage the door seal and tub.
- Load sharp items and knives with the handles up to reduce the risk of injury.
- Do not wash plastic items unless they are marked dishwasher safe. If not marked, check with manufacture for recommendation. Items that are not dishwasher safe may melt and create a potential fire hazard.
- If the dishwasher drains in to a food disposer, make sure disposer is completely empty before running dishwasher.
- Do not tamper with controls.
- Do not operate your dishwasher unless all enclosure panels are properly in place.
- Do not touch the heating element during or immediately after use, especially if the sanitize option has been selected.
- To reduce the risk of injury, do not allow children to play in or on a dishwasher.
- Do not let children abuse, sit, or stand on door or racks of the dishwasher.
- **Under certain conditions, hydrogen gas may be produced in a hot water system that has not been used for two weeks or more. HYDROGEN GAS IS EXPLOSIVE. If the hot water system has not been used for such a period, before using dishwasher, turn on all hot water faucets and let water flow from each for several minutes. This will release any accumulated hydrogen gas. Hydrogen gas is flammable. Do not smoke or use an open flame during this time.**

- Do not store or use combustible materials, gasoline or other flammable vapors and liquids in the vicinity of this or any other appliance.
- Use only detergents or rinse agents recommended for use in a dishwasher and keep them out of the reach of children.
- Keep young children and infants away from dishwasher when it is operating.
- Do not use the dishwasher if it has a damaged power line or plug, and do not plug the dishwasher into a damaged outlet. Failure to observe these instructions may result in electrical shock.
- Remove the door to the washing compartment when removing an old dishwasher from service or discarding it.

WARNING

To reduce the risk of fire, electrical shock or injury when using your dishwasher, follow all basic precautions.

PRODUCT REGISTRATION

Thank you for choosing **Electrolux.**

This Use & Care Guide is part of our commitment to customer satisfaction and product quality throughout there service life of your new appliance.

We view your purchase as the beginning of a relationship. To ensure our ability to continue serving you, please use this page to record important product information.

_____

Purchase Date

_____

Model Number

_____

Serial Number

Registering your product with Electrolux enhances our ability to serve you. You can register online at **www.electrolux.com** or by dropping your Product Registration Card in the mail.

NOTE

Not all cycles and options available on all models.

Product Specifications:

Capacity	8 place settings
Dimensions	17.6 x 21.7 x 32.5 inches 448 x 550 x 825 mm (W x D x H)
Power Supply	120v, 60Hz
Rated Power Usage	wash motor 100W, heater 700W
Water feed pressure	20 psi–120 psi (0.14 MPa–0.82 MPa)

Getting Started

1. Load the dishwasher. (See Dish Preparation and Loading sections)
2. Add detergent. (See Filling the detergent dispenser)
3. Add rinse aid, if needed. (See Rinse Aid)
4. Close door.
5. Select desired CYCLE. (See Cycle Chart)
6. Select desired OPTIONS. The indicator light will glow when selected. (See Control Panel)
7. Run hot water faucet nearest dishwasher until water is hot.
8. To start, press **START.** (See Control Panel)

FEATURES AT A GLANCE

Your dishwasher, illustrated below, cleans by spraying a mixture of hot, clean water, and detergent against the soiled surfaces of your dishes and tableware. The dishwasher fills with water covering the filter area. Water is then pumped through the multiple filter and spray arms. Separated soil particles go down the drain as the water is pumped out and replaced with clean water. The number of water fills will vary with the cycle being used.

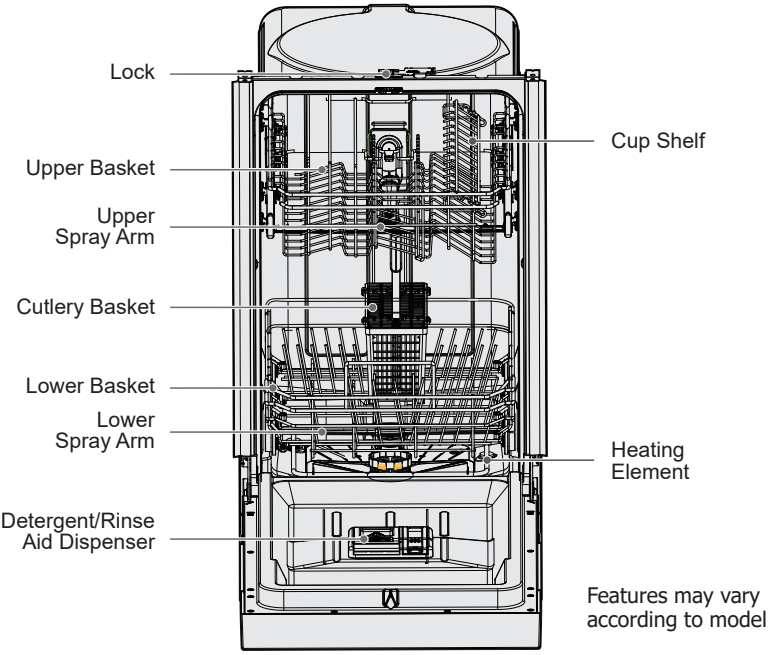

Smart Wash System

This dishwasher has a Smart Wash System. It can determine the type of cycle required and automatically adjust the cycle to clean the dishes more efficiently. When a partial load of lightly soiled dishes is placed in the unit, a wash cycle similar to a short wash will automatically be performed. When a full load of heavily soiled dishes is placed in the unit, a heavy wash cycle will automatically be performed.

Multiple Filter System

This dishwasher has a multiple Filter System. In the System there are three mesh filters. It can separate soiled water and clean water in different chambers.

The multiple filter system helps to get better performance with less water and less energy.

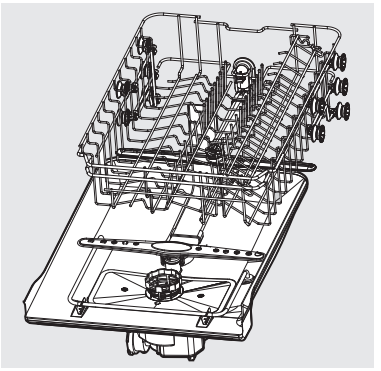

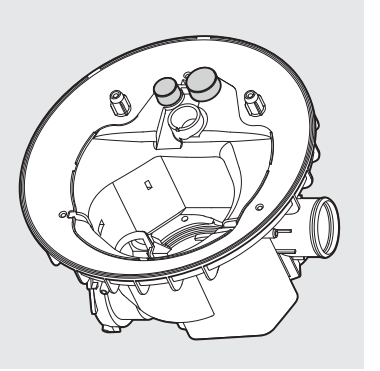



Wash Cycle Selections

Cycle times are approximate and will vary with the options selected. Hot water is necessary to activate the detergent and melt fatty food soils. An automatic sensor will check the incoming water temperature. If it is not at the appropriate temperature the timer will delay the cycle to allow automatic water heating during the main wash.

Wash Cycles

HEAVY WASH
Recommended for pots, pans, casseroles and dinnerware having light to heavily soiled loads.

NORMAL WASH
Recommended for lightly to heavily soiled loads.

ECO
Recommended for lightly soiled and pre-rinsed dishes and silverware.

DELICATE
Recommended for lightly soiled China and Crystal.

FAST
A shorter wash recommended for lightly soiled loads that do not need drying.

RINSE
Recommended for pre-rinsing dishes or glasses. This is only a rinse that keeps food from drying on your dishes and reduces odor buildup in your dishwasher until you are ready to wash a full load. Do not use detergent.

Wash Options

Press the **SANITIZE/HEAT DRY** button to scroll through the options. The indicator light will illuminate when the option has been selected.

SANITIZE
When **SANITIZE** is selected, the temperature of water will be maintained at 158°F (70°C) max. The max temperature may not be reached if the incoming water temperature is not correct. Certified residential dishwashers are not intended for licensed food establishments.

WARNING

The **Sanitize** option is only available with **HEAVY WASH,NORMAL WASH,ECO WASH** and **FAST WASH** cycles.

Heat dry
When **Heat dry** is selected, the heater will work during the drying process.

Functions

START
Press **START** to start a wash cycle.
Press **START** and hold for **3 Seconds** to cancel a cycle that is already in progress.

DELAY
The Delay option allows you to automatically delay starting your dishwasher from 1-12 hours and each press increases the time by one hour.To start 1-12 hour delay, press the **Delay** button until the desired delay time shows in the display window (1h-12h) and press the **START** button. The digital screen will display the delay time to indicate the delay start has been activated, and will remain until the cycle starts. To cancel the Delay option and begin the cycle before the delay period is over, open the door, and then press the **Start** button and hold for **3 Seconds.**

OPERATING INSTRUCTIONS

Display window
This LED screen displays the minutes remaining in a running cycle, hours of delay before the unit is set to start, error codes, etc.

- If the machine is in operation, the remaining time (mins) of the selected cycle will be shown in the display window.
- If the **Delay** option is selected, the number of hours of delay (1h-12h) will be shown in the display window. When the start of the cycle has been delayed, The digital screen will display the delay time.After the machine starts, the remaining time of the selected cycle will be shown in minutes on the display window.
- If the **SANITIZE** is selected, the **SANITIZED** light will illuminate after the cycle has ended.
- When rinse aid is insufficient, **RINSE AID** is illuminated. This indicator is OFF as default, press and hold **NORMAL+FAST** to activate it.

NOTE

The remaining time could suddenly increase or drop several minutes. This means the Smart Sensor has checked the soil level and adjusted the number of fill cycles.

- If an error occurs which is critical to the machines function and safe operation, the control shall shut down and indicate an error code in the display window. (See Error Codes).

If Error codes are displayed, contact the dealer or qualified service center. They will available to provide assistance in trouble shooting the problem and/or locate and authorized service technician if needed.

Cycle Chart

Cycle	Options available	Water usage	Cycle Time
HEAVY	SANITIZE, HEAT DRY	4.9 gal. 18.5 liters	155 -160 mins.
NORMAL	SANITIZE, HEAT DRY	2.5-4.9 gal. 9.5-18.5 liters	125-155 mins.
ECO	SANITIZE, HEAT DRY	4.1 gal. 15.5 liters	130 -145 mins.
DELICATE	HEAT DRY	4.1 gal. 15.5 liters	105 mins.
FAST	SANITIZE, HEAT DRY	3.3 gal. 12.5 liters	60 -115 mins.
RINSE	HEAT DRY	1.8 gal. 6.7 liters	20 -55 mins.

The above water usage has not selected the options.

Dish Preparation

Scrape away large pieces of food, bones, pits, toothpicks, etc. The continuously filtered wash system will remove the remaining food particles. Burned on foods should be loosened before loading. Empty liquids from glasses and cups. Foods such as mustard, mayonnaise, vinegar, lemon juice and tomato based products may cause discoloration of stainless steel and plastics if allowed to sit for a long period of time.

Unless the dishwasher is to be operated at once it is best to rinse off these food soils. If the dishwasher drains into a food disposer, **be sure disposer is completely empty before starting dishwasher.**

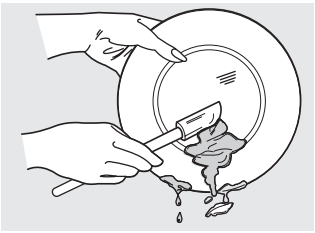

Adjusting the upper basket

The height of the upper basket can be easily adjusted to accommodate taller dishes in either the upper or lower basket.

To adjust the height of the upper rack, follow these steps:

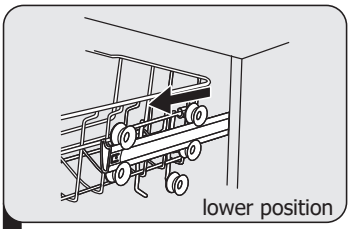

1 Pull out the upper basket.

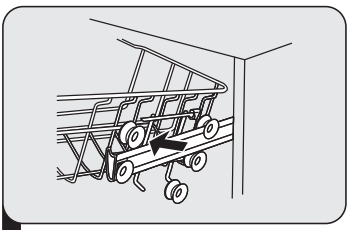

2 Lift up and pull out to remove the upper basket.

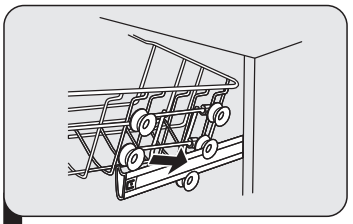

3 Re-attach the upper basket to upper or lower rollers.

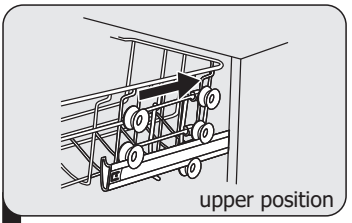

4 Push in the upper basket.

Loading the Upper Basket

Features and appearance of racks and silverware basket as shown may vary from your model.

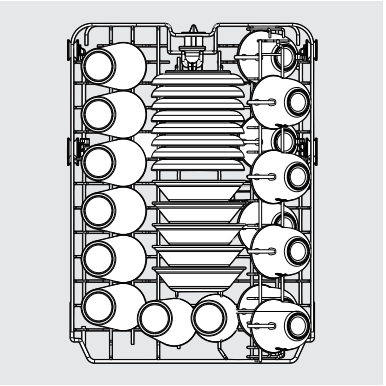

Standard 8 place settings for upper basket.

The upper basket has been designed for small plates, mugs, glasses, and plastic items marked "dishwasher safe", etc. For best results, place the bowls, cups, glasses with soiled surface facing down or toward the center. Tilt slightly for better drainage. Load small plates and bowls in two half rows, so that the front of each plate faces the back of the plate in front of it, and the open sides of the plates at the center of the dishwasher face each other.

PREPARING AND LOADING DISHES

When loading dishes, pull the upper basket out sufficiently so you can load it without striking the counter.

WARNING

Make sure the loaded dishes do not interfere with the rotation of the spray arm located at the bottom of the upper basket. (Check this by rotating the spray arm by hand.)

Loading the Lower Basket

Features and appearance of racks and silverware basket as shown may vary from your model.

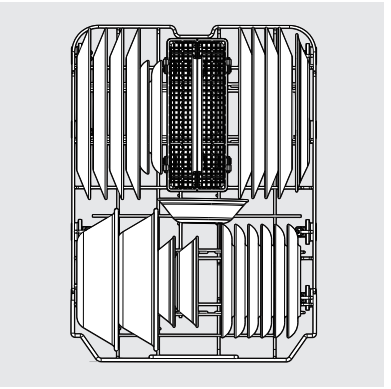

Standard 8 place settings for lower basket.

The bottom basket is designed to load plates, soup bowls, plates, saucers and cookware.

- The adjustable basket space will allow you to load items with a maximum height of 11 inches.
- The fold-down tines in the bottom basket make it easy to load those extra large and hard-to-fit items. The tines may be left up for normal use or folded down for more flexible loading. Fold down for more space to load large pots or pans.

Load your plates into the dishwasher in two half rows, so that the front of each plate faces the back of the plate in front of it, and the open sides of the plates at the center of the dishwasher face each other.

Large items should be turned so that the inside faces downward. Load large items such as pans and pots into the dishwasher so their open sides face downwards. We recommend loading cups, stemware, and small plates into the upper basket.

Larger items should be placed along the edge so they do not interfere with the spray arm rotation. Check to ensure that they do not prevent the detergent dispenser from opening.

WARNING

Make sure the loaded dishes do not interfere with the rotation of the spray arm located at the bottom of the upper basket. (Check this by rotating the spray arm by hand.)

Loading the Silverware Basket

Features and appearance of racks and silverware basket as shown may vary from your model.

The silverware basket can be divided into three separate modules that can be used in both upper and lower racks.

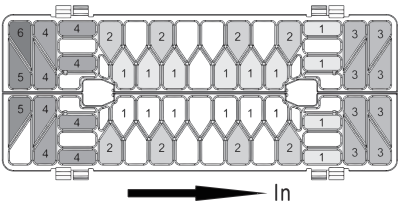

1. Spoons
2. Knives
3. Salad forks
4. Forks
5. Large spoons
6. Large forks

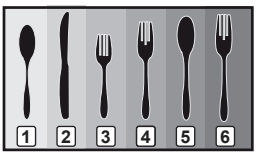

WARNING

Load sharp items (knives, skewers, etc.) pointing down.

Failure to do so may result in injury.

WARNING

Make sure the loaded items do not interfere with the rotation of the spray arm located at the bottom of the upper basket. (Check this by rotating the spray arm by hand.)

Adding a Dish

To add or remove items after wash cycle starts:

1. Make sure there is a full wash cycle yet to be completed so that any added items are thoroughly washed and rinsed.
2. Open door slightly until wash action stops before completely opening.
3. Add the item.
4. Press the **START** button to resume the wash cycle, then close the door in 4 seconds to latch.

WARNING

TO AVOID BURN INJURY: Slightly open door and wait until spray arms and wash action stop. Hot water may splash out of dishwasher. Failure to do so may result in injury.

DETERGENT AND RINSE AID DISPENSER

The detergent and rinse aid dispenser will automatically release the measured amount of detergent and rinse aid at the appropriate time during the dishwasher cycles.

Rinse aid greatly improves drying and reduces water spots and filming. Without rinse aid your dishes and dishwasher interior will have excessive moisture.

The **Heat Dry** option will not perform as well without rinse aid. The rinse aid dispenser, located next to the detergent cup, automatically releases a measured amount of rinse aid during the last rinse.

Check the viewing port over rinse aid dispenser to determine if the rinse aid is low. Fill as needed.

NOTE

Your dishwasher is designed to use a liquid rinse aid. The use of rinse greatly improves drying performance after the final rinse. Do not use a solid or bar-type rinse aid. Under normal conditions, the rinse aid will last approximately one month. It is best to keep it full, but do not over fill.

Filling the Detergent Dispenser

1. Push the dispenser cover release catch to open the main wash detergent compartment.

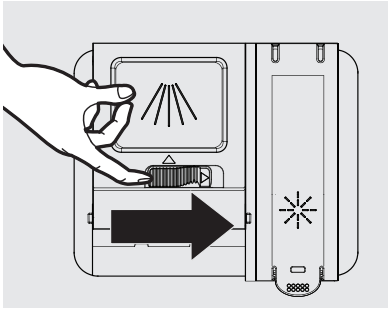

NOTE

The flap is always open at the end of a dishwashing cycle.

2. Add the recommended amount of detergent to the detergent compartment.

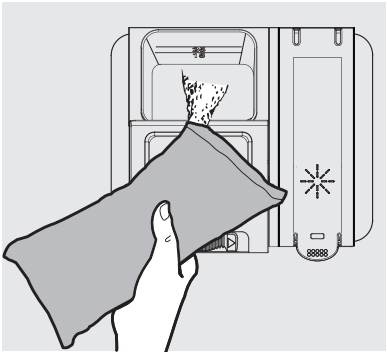

3. Press down on the top of the cover to secure.

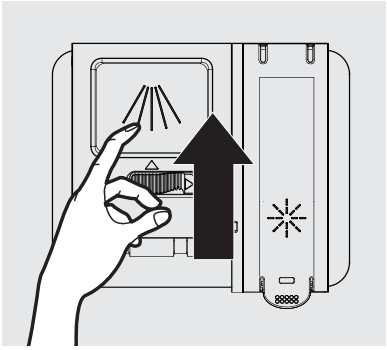

Filling the Rinse Aid Dispenser

Rinse aid improves the drying performance of the dishwasher.

This dishwasher has been designed to **use liquid rinse aid only**. Using a powdered rinse aid will clog the reservoir opening and cause the dishwasher to malfunction.

WARNING

- DO NOT add regular detergent to the rinse aid dispenser.
- DO NOT use powdered rinse aid in the rinse aid dispenser.

DETERGENT AND RINSE AID DISPENSER

NOTE

Visually check viewing port to determine if rinse aid is low. Fill as needed.

WARNING

Do not fill the reservoir above the full level indicator. Excess rinse aid can overflow during the wash cycle.

To refill the rinse aid dispenser:

1. Lift up the end tab of rinse aid cover to open.

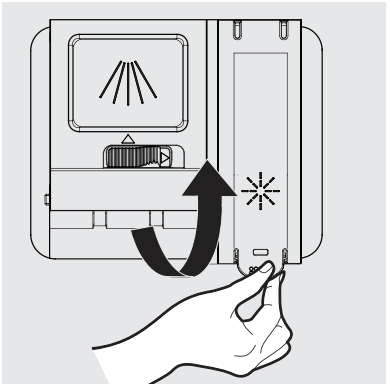

2. Fill the rinse aid dispenser with liquid rinse aid until full. DO NOT overfill.

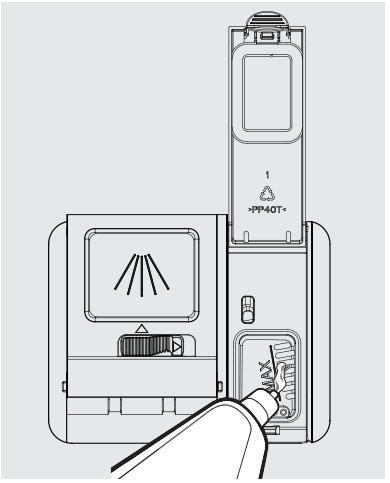

3. Press the rinse aid cover down firmly to close.

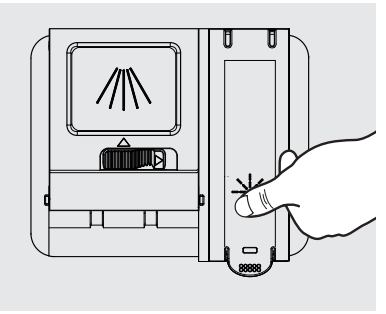

4. You can adjust the amount of the rinse aid released during the rinse. The higher the number, the greater the amount of rinse aid released.
   If your glassware has spots following the cycle, increase the rinse a setting.
   If your glassware has streaks after the cycle, decrease the rinse aid setting.
   Rinse Aid Setting Method:
   1)Open the door and turn on the dishwasher.
   2)Within 60 seconds, press and hold the **RINSE** button for 5 seconds to enter setting mode. The Rinse Aid indicator will flash, and the current level will display. The default level is d5.
   3)Press the **RINSE** button to cycle through the levels:
   "d5 → d6 → d1 → d2 → d3→d4 → d5."
   4)If no buttons are pressed for 5 seconds or power off, the selected level is saved, and the system exits the settings mode.

NOTE

Use the viewing port when filling the rinse aid reservoir.

Cleaning the Dishwasher

Keeping your dishwasher clean improves its performance, reduces unnecessary repairs, and lengthens its life.

Cleaning the Exterior

It's best to clean spills on the outside of your dishwasher as they occur. Use a soft, damp cloth on the control panel to gently wipe away spills and dust. Do not use benzene, wax, thinner, chlorine bleach, or alcohol. These materials may discolor the inner walls and cause stains. Do not clean the dishwasher by sprinkling water over it and avoid letting water come into contact with any of the electrical parts.

NOTE

If your dishwasher has a stainless steel door panel, you can clean it with a stainless steel cleaner for Home Appliances or a similar product using a clean, soft cloth.

Cleaning the Interior

WARNING

BURN HAZARD

Allow heating element to cool before cleaning the interior. Failure to do so can result in burns.

Clean the interior of your dishwasher periodically to remove any dirt or food particles. Wipe the inside of the dishwasher and the inner part of the door with a wet dishcloth. We recommend filling the detergent dispenser with dish detergent, and then running the dishwasher empty periodically using either the Normal or Express 60 cycle with the sanitize option. This will keep your dishwasher clean.

If white spots and odor are still present in your dishwasher, run the Normal cycle with the dishwasher empty and without detergent until it flushes. Then, interrupt the cycle and put an 8 ounce cup of white vinegar into the tank. Close the dishwasher and let the cycle finish.

WARNING

Do not remove the tub front seal (the long rubber seal enclosing the opening of the dishwasher).

1. Turn off the dishwasher.
2. Rotate the filter insert counterclockwise to unfasten and then lift up to remove.

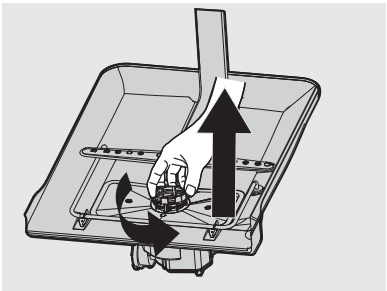

3. Remove any dirt or other remains from the filters, you can choose to separate the filters or rinse them under running water directly.

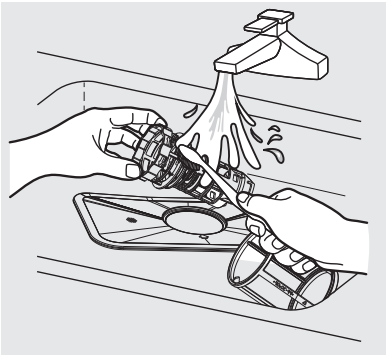

4. Reassemble the filters in the reverse order of the disassembly, replace the filter insert, and rotate clockwise to the close arrow.

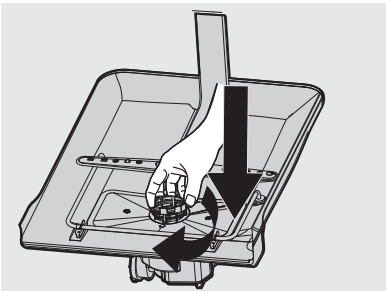

CAUTION

If the filter insert is not closed properly, its performance will be decreased.

Cleaning the Spray Arm

If your dishwasher does not seem to be cleaning adequately or the spray arm nozzles seem clogged, the lower spray arm can be removed and cleaned. Remove spray arm carefully to avoid damage.

1. Check whether the nozzle holes are clogged by food particles.
2. If cleaning is needed, to remove the upper spray arm, hold the nut in the center still and rotate the spray arm counterclockwise to remove it; to remove the lower spray arm, hold the middle of the arm and pull it upwards.
3. Clean the nozzles, and then put the spray arm back into place.
4. Rotate the spray arm to check that it is properly in place.

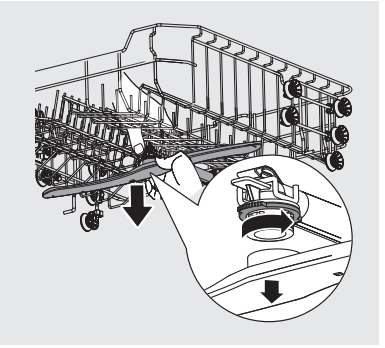

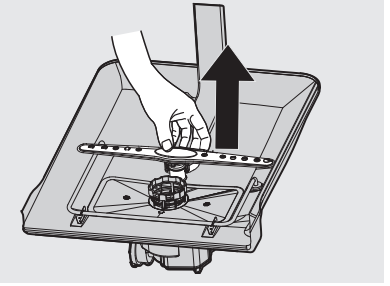

Cleaning the Door Gasket

If the dishwasher door is not closing properly or if water is leaking from the door during the cycle, check that door gasket is clear of debris. If needed, clean the door gasket with a damp cloth to remove food particles and ensure a tight seal.

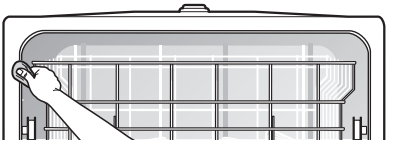

Before calling for service, review this list. It may save you both time and expense. This list includes common experiences that are not the result of defective workmanship or material in your dishwasher.

PROBLEM	POSSIBLE CAUSES	SOLUTIONS
Dishwasher won't start	• Dishwasher won't start. • Power supply or power line is not connected. • Delay option has been selected.	• Shut the door completely make sure it is latched. • Check and connect the power supply. • Refer to Delay section in this manual to reset.
Dishwasher beeps at the end of the cycle	• The wash cycle will beep to indicate the end of the cycle.	
Dishwasher operates too long	• The dishwasher is connected to cold water. • The cycle time will vary due to the soil. • The sanitize option is selected.	• Check the dishwasher, make sure it is properly connected to the hot water supply. • When heavy soil is detected, some cycles will automatically increase the cycle time. • When sanitize option is selected, the cycle time will be increase to meet the sanitized temperature request.
Dishes are not clean enough	• Water pressure is temporarily low. • The inlet water temperature is low. • Dishes are loaded too close together. • Improper use of detergent. • The selected cycle is not suitable for food soil condition. • Spay arms is blocked by some items.	• Use you dishwasher when the water pressure is normal. • Make sure the dishwasher is connected to the hot water supply Try not use your dishwasher when hot water is being used elsewhere in the house. • Load the dishes again as per the manual. • Add detergent depending on the water hardness and the cycle you chose. Use fresh detergent. • Choose anther cycle for longer washing time. • Make sure the spay arm is rotated freely.
Dishes not dry enough	• Rinse aid dispenser is empty. • Improper loading of dishes. • The cycle you chose did not included the drying.	• Fill rinse aid dispenser or increase the amount of rinse aid. • Load the dishes again as the manual instructs. • Choose the proper cycle with drying.
Spots and film on dishes	• Water hardness is too high. • Improper loading of dishes. • Old rinse aid is used. • Rinse dispenser empty.	• For extremely hard water install a water softener. • Load the dishes again as the manual indicates. • Use fresh rinse aid. • Add rinse aid to the dispenser.

BEFORE YOU CALL

PROBLEM	POSSIBLE CAUSES	SOLUTIONS
Etching	• Using too much detergent. • The inlet water temperature exceeds 158°F (70°C).	• Use less detergent if you have soft water. • Lower the inlet water temperature.
Detergent left in dispenser cup	• Detergent may be too old. • Spray arm is blocked.	• Use fresh detergent. • Load the dishes, making sure the spray arms are not blocked.
Detergent dispenser will not shut	• Improper operation of the detergent cover.	• Add the detergent and rinse aid as indicated by the manual.
Water remains in the dishwasher	• Previous cycle has not finished or has been interrupted.	• Select the proper cycle explained in the manual.
Dishwasher does not drain properly	• Drain is clogged. • Drain hose is kinked.	• Check the air gap if you have one. Make sure the disposer is empty if dishwasher is connected to disposer. • Make sure the drain hose is properly connected to the sink.
Suds in the tub	• Improper detergent is used.	• Make sure to use only the automatic dishwasher detergent.
Dishwasher leaks	• Excessive suds caused by using the improper detergent. • Dishwasher is not level.	• Make sure to use only the proper dishwasher detergent. • Level the dishwasher.
Black or gray marks on dishes	• Aluminum utensils have rubbed against dishes.	• Rearrange the dishes.
Stained tub interior	• Coffee and tea soil. • Reddish stain.	• Using an approved spot cleaner to remove the soil. • Some tomato-based foods will cause this, use of the rinse only cycle right after loading this will decrease the staining.
Noises	• Detergent cup opening\ Drain pump sound. • A hard object has entered the wash module. When the object is ground up, the sound should stop.	• This is normal. • If the noise persists after a complete cycle, call for service.
Dishwasher won't fill with water	• Water valve is turn off. • Door latch may not be properly seated.	• Check if the water valve is turn on. • Make sure the door is closed.

Error Codes

Error codes will display on the display window when the following errors occur:

Code	Meaning	Possible Causes
E1	Longer inlet time	Faucets is not opened, or water intake is restricted, or water pressure is too low.
E4	Unit leaking	Some element of dishwasher leaks.



WARNING

- If overflow occurs, turn off the main water supply before calling a service provider.
- If there is water in the base pan because of an overfill or small leak, the water should be removed before restarting the dishwasher.

MAJOR APPLIANCE WARRANTY

Your appliance is covered by a one year limited warranty. For one year from your original date of delivery, Electrolux will repair or replace any parts of this appliance that prove to be defective in materials or workmanship when such appliance is installed, used, and maintained in accordance with the provided instructions. The stainless tub and door liner of your appliance are covered by a lifetime limited warranty. During the lifetime of the appliance, Electrolux will provide a replacement stainless tub or door liner that fails to contain water due to a defect in materials or workmanship if the appliance is installed, used, and maintained in accordance with the provided instructions. In addition, the dishwasher racks and the electronic control module of your appliance are covered by a two through five year limited warranty. During the 2nd through 5th years from your original date of purchase, Electrolux will provide a replacement dishwasher rack or electronic control module for your appliance which has proven to be defective in materials or workmanship when such appliance is installed, used, and maintained in accordance with the provided instructions.

Exclusions:

This Warranty does not cover the following:

1. Products with original serial numbers that have been removed, altered or cannot be readily determined.
2. Product that has been transferred from its original owner to another party or removed outside the USA, Puerto Rico, or Canada.
3. Rust on the interior or exterior of the unit.
4. Products purchased “as-is” are not covered by this warranty.
5. Food loss due to any refrigerator or freezer failures.
6. Products used in commercial setting.
7. Service Calls which do not involve malfunction or defects in materials or workmanship, or for appliances not in ordinary household use or used other than in accordance with the provided instructions.
8. Service Calls to correct the installation of your appliance or to instruct you how to use your appliance.
9. Expenses for making the appliance accessible for servicing, such as removal of trim, cupboards, shelves, etc., which are not part of the appliance when it is shipped from the factory.
10. Service calls to repair or replace appliance light bulbs, air filters, water filters, other consumables, or knobs, handles, or other cosmetic parts.
11. Labor or in-home service costs during the additional limited warranty periods beyond the first year from your original date of purchase.
12. Pickup and delivery costs; your appliance is designed to be repaired in the home.
13. Surcharges including, but not limited to, any after hour, weekend, or holiday service calls, tolls, ferry trip charges, or mileage expense for service calls to remote areas, including the state of Alaska.
14. Damages to the finish of appliance or home incurred during transportation or installation, including but not limited to floors, cabinets, walls, etc.
15. Damages caused by: services performed by unauthorized service companies; use of parts other than genuine Electrolux parts or parts obtained from persons other than authorized service companies; or external causes such as abuse, misuse, inadequate power supply, accidents, fires, or acts of God.

DISCLAIMER OF IMPLIED WARRANTIES; LIMITATION OF REMEDIES

CUSTOMER’S SOLE AND EXCLUSIVE REMEDY UNDER THIS LIMITED WARRANTY SHALL BE REPAIR OR REPLACEMENT AS PROVIDED HEREIN. CLAIMS BASED ON IMPLIED WARRANTIES, INCLUDING WARRANTIES OF MERCHANTABILITY OR FITNESS FOR A PARTICULAR PURPOSE, ARE LIMITED TO ONE YEAR OR THE SHORTEST PERIOD ALLOWED BY LAW, BUT NOT LESS THAN ONE YEAR. ELECTROLUX SHALL NOT BE LIABLE FOR CONSEQUENTIAL OR INCIDENTAL DAMAGES SUCH AS PROPERTY DAMAGE AND INCIDENTAL EXPENSES RESULTING FROM ANY BREACH OF THIS WRITTEN LIMITED WARRANTY OR ANY IMPLIED WARRANTY. SOME STATES AND PROVINCES DO NOT ALLOW THE EXCLUSION OR LIMITATION OF INCIDENTAL OR CONSEQUENTIAL DAMAGES, OR LIMITATIONS ON THE DURATION OF IMPLIED WARRANTIES, SO THESE LIMITATIONS OR EXCLUSIONS MAY NOT APPLY TO YOU. THIS WRITTEN WARRANTY GIVES YOU SPECIFIC LEGAL RIGHTS. YOU MAY ALSO HAVE OTHER RIGHTS THAT VARY FROM STATE TO STATE.

If You Need Service

Keep your receipt, delivery slip, or some other appropriate payment record to establish the warranty period should service be required. If service is performed, it is in your best interest to obtain and keep all receipts. Service under this warranty must be obtained by contacting Electrolux at the address or phone numbers below.

This warranty only applies in the USA, Puerto Rico and Canada. In the USA and Puerto Rico, your appliance is warranted by Electrolux Consumer Products, Inc. In Canada, your appliance is warranted by Electrolux Canada Corp. Electrolux authorizes no person to change or add to any obligations under this warranty. Obligations for service and parts under this warranty must be performed by Electrolux or an authorized service company. Product features or specifications as described or illustrated are subject to change without notice.

USA
1-800-374-4432
Electrolux Consumer Products, Inc.
10200 David Taylor Drive
Charlotte, NC 28262

Electrolux

Canada
1.800.265.8352
Electrolux Canada Corp.
5855 Terry Fox Way
Mississauga, Ontario, Canada
L5V 3E4

Quebec Right to Repair

Though Electrolux makes every effort to make replacement parts, repair services and information necessary to maintain or repair our products available to consumers, parts, service and information are not guaranteed, pursuant to section 39 of the Consumer Protection Act, CQLR, c. P-40.1 and sections 79.18 to 79.20 of the Regulation respecting the application of the Consumer Protection Act, CQLR, c P-40.1, r. 3. If you need replacement parts, you may call us at 1 (800) 265-8352 for service in French or English.

You may book repair services online at information | Book a service | Electrolux. Alternatively, our resource library is available at Resource Library | Electrolux to help you diagnose and resolve issues which may arise during the lifetime of your appliance.

Though most parts are available for purchase, subject to short-term availability constraints, the following appliances and parts are not serviceable

Legend:

Availability of replacement parts, repair services, and information for maintenance or repair.	
⚠	Partially Available
☒	Not Available
✓	Available

Refrigerators	⚠	Cabinet, 14cu ft and less no sealed system parts
Freezer	⚠	9 cu. ft and less no sealed system parts.
Beverage Centers	⚠	Only cosmetic parts available
Washers and Dryers	✓	Replacement parts, repair services, and information for repair and maintenance available.
Dishwashers	⚠	Replacement tub assemblies are not available.
Ranges	⚠	Replacement liners and frames are not available
Ovens	⚠	Replacement liners and frames are not available
Cooktops	✓	Replacement parts, repair services, and information for repair and maintenance available.

Microwaves		Countertop microwaves: No replacement parts are available Over the range microwave: liner and frame are not available
Hoods/Vents		Limited cosmetic parts are available
Air Conditioners		12,000 BTU and under: No replacement parts are available Above 12,000 BTU: Only cosmetic parts are available
Dehumidifiers		No replacement parts, service, or repair information available.
Air Purifiers		No replacement parts, service, or repair information available.
Vacuums		No replacement parts, service, or repair information available.
Small Kitchen Appliances		No replacement parts, service, or repair information available.

electrolux.com

A314966 01(October 2025)

