FRIGIDAIRE

frigidaire.com/register

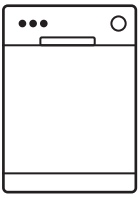

GDHH4527A

EN User Manual | **Dishwasher**

Welcome to our family

Thank you for bringing Frigidaire into your home! We see your purchase as the beginning of a long relationship together.

This manual is your resource for the use and care of your product. Please read it before using your appliance. Keep it handy for quick reference. If something doesn't seem right, the troubleshooting section will help you with common issues.

FAQ, helpful tips and videos, cleaning products, and kitchen and home accessories are available at **http://www.frigidaire.com**.

We are here for you! Visit our website, chat with an agent, or call us if you need help. We may be able to help you avoid a service visit. If you do need service, we can get that started for you.

Let's make it official! Be sure to register your product.

CONTENTS

1. IMPORTANT SAFETY INFORMATION..... 2
2. FEATURES..... 4
3. CONTROLS AND SETTINGS.....5
4. OPERATING INSTRUCTIONS..... 7
5. CARE AND CLEANING..... 13
6. TROUBLESHOOTING..... 15
7. LIMITED WARRANTY.....17
8. QUEBEC RIGHT TO REPAIR.....18

1. IMPORTANT SAFETY INFORMATION

1.1 Keep a record for quick reference

Model number

.....

Serial number

.....

Purchase date

.....

⚠ WARNING!

Read all instructions before using this appliance.

➡ IMPORTANT

This Manual does not cover every possible condition and situation that may occur. Use common sense and caution when installing, operating and maintaining any appliance.

1.2 Safety definitions

⚠

This is the safety alert symbol. It is used to alert of potential personal injury hazards. Obey all safety messages that follow this symbol to avoid possible injury or death.

⚠ DANGER

DANGER indicates an imminently hazardous situation which, if not avoided, will result in death or serious injury.

⚠ WARNING!

WARNING indicates a potentially hazardous situation which, if not avoided, could result in death or serious injury.

⚠ CAUTION!

CAUTION indicates a potentially hazardous situation which, if not avoided, may result in minor or moderate injury.

➡ IMPORTANT

IMPORTANT indicates installation, operation or maintenance information which is important but not hazard-related.

1.3 Child safety

This appliance is not intended for use by persons (including children) with reduced physical, sensory or mental capabilities, or lack of experience and knowledge, unless they have been given supervision or instruction concerning use of the appliance by a person responsible for their safety.

Destroy or recycle the carton, plastic bags, and any exterior wrapping material immediately after the refrigerator is unpacked. Children should never use these items to play. Cartons covered with rugs, bedspreads, plastic sheets or stretch wrap may become airtight chambers, and can quickly cause suffocation.

- Keep children away from the appliance when it is operating.
- Do not allow children to play with the appliance.
- Do not let children sit or stand on the door or racks of the appliance.
- Keep dishwasher detergent and rinse agents away from children.

1.4 Important safety instructions

⚠ WARNING!

To reduce the risk of fire, electrical shock or injury when using the appliance, follow this user manual.

Do not store or use gasoline, or other flammable liquids in the vicinity of this or any other appliance. Read product labels for warnings regarding flammability and other hazards.

Remove all staples from the carton. Staples can cause severe cuts, and also destroy finishes if they come in contact with other appliances or furniture.

NSF certified residential dishwashers are not intended for licensed food establishments.

Do not operate the appliance unless all enclosure panels are in their proper place.

Use only detergents and rinse agents recommended for use in the appliance.

Make sure that disposer is completely empty before running the appliance.

Do not wash plastic items unless marked: "Dishwasher Safe" or equivalent. Check with manufacturer for recommendations, if not marked. Items that are not marked "Dishwasher Safe" may melt and create a potential fire hazard.

When loading items to be washed:
- Locate sharp items and knives so that they are not likely to damage the door seal or tub.
- Load sharp items and knives with the handles up to reduce the risk of cut-type injuries.

Do not tamper with controls.

Use care unloading the dishware when the Sanitize option has been selected. Contents may be hot to the touch immediately after the end of cycle.

⚠ DANGER

Hydrogen gas is highly explosive and flammable.

Under certain conditions, hydrogen gas may be produced in a hot water system that has not been used for 2 weeks or more. If hot water system has not been used for such a period, before using dishwasher, turn on all hot water faucets and let water flow from each for several minutes. This will release any accumulated hydrogen gas. Do not smoke or use an open flame during this time.

Do not store or use combustible materials, gasoline or other flammable vapors and liquids in the vicinity of this or any other appliance.

Disconnect electrical power to the appliance before servicing.

Repairs should be done by a qualified technician.

To avoid entrapment and/ or suffocation, remove door or door latch mechanism from any dishwasher that is discarded or not in use.

1.5 Electrical information

⚠ WARNING!

Avoid fire hazard or electric shock.

- This appliance must be connected to a ground metal, permanent wiring system, or an equipment-grounding conductor must be run with the circuit conductors and connected to the equipment-grounding terminal or lead on this appliance. Read the Installation Instructions for details.
- This appliance is designed to operate on regular house current (120V, 60Hz). Use a circuit equipped with a 15 ampere fuse or circuit breaker. Use a 20 ampere fuse if dishwasher is connected with a food disposer.
- If the power cord is damaged, it should be replaced by an authorized service technician to prevent any risk.
- Never unplug the appliance by pulling on the power cord. Always grip the plug firmly, and pull straight out from the receptacle to prevent damaging the power cord.

2. FEATURES

2.1 Product Description

Your dishwasher cleans by spraying a mixture of hot water and detergent through the spray arms against soiled surfaces. First, the dishwasher drains for a few seconds to remove soils dropped while loading, then fills with water covering the filter area. Water is then pumped through the spray arms. Soil particles go through and across the filter and down the drain as the water is pumped out. This series of steps are repeated as needed. The number of water fills varies with the cycle being used.

Features may vary according to model

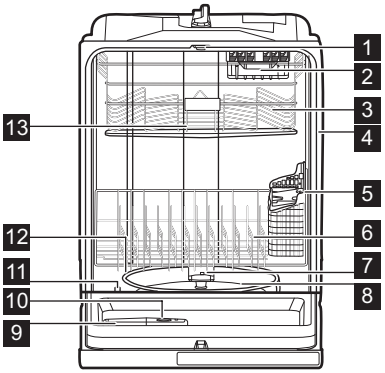

1 Nozzle or Spray Arm
2 Third Level Tray
3 Upper Rack
4 Serial Label (located on right side of door)
5 Silverware Basket
6 Bottom Rack
7 Lower Orbit Spray Arm
8 Glass trap
9 Rinse Aid Dispenser
10 Detergent Dispenser
11 Overfill Protector
12 Heating Element
13 Middle Spray Arm

IMPORTANT

Accessories are available for your appliance and may be purchased at Frigidaire.com or by calling 1-800-374-4432(Frigidaire.ca or 1-800-265-8352 in Canada) or from an authorized seller.

3. CONTROLS AND SETTINGS

3.1 Control Panel

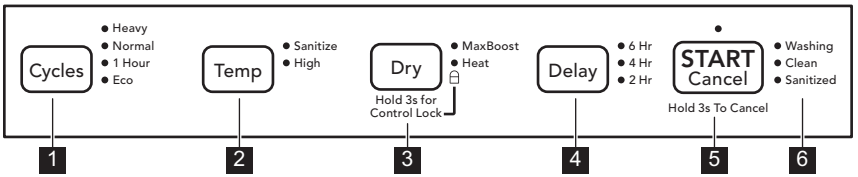

NOTE

Your dishwasher uses a DishSense™ Technology to understand how much food is on the dishes and then adjusts the cycle accordingly.

⚠ CAUTION!

Before starting dishwasher be sure that the water is connected and turned on. Failure to do so may cause damage to the pump seal and result in water leakage.

NOTE

The dishwasher is programmed to remember your last cycle so you do not have to reset each time. To start the dishwasher using the same cycle and options selected on the previous wash, just press the START/CANCEL pad.

Recommended Cycle for typical use: The NORMAL cycle with its factory default options of normal temperature and heated dry together provide the best all around performance. This cycle selection is recommended for everyday use and is suitable for a large range of both dish load sizes and food quantities remaining on those dishes.

NOTE

Not all cycles and options available on all models.

Option Selections

1 WASH CYCLE SELECTIONS:
Cycle times are approximate and will vary with options selected. Hot water is necessary to activate dishwasher detergent and melt fatty food soils. An automatic sensor will check the incoming water temperature and, if it is not hot enough, the cycle will be lengthened for automatic water heating in the main wash and final rinse of all cycles. This happens even when the HEAVY option has not been selected. When HEAVY is selected, an even higher temperature will be reached to handle heavier soil loads. The DishSense™ Technology checks the soil level on your dishes in the HEAVY and NORMAL cycles. Depending on soil level, the sensor will determine if additional water fills are needed to clean the dishes or if water fills can be deleted. Cycle time and water usage will vary based on the amount of soil on the dishes. Cycle

time will also vary based on the options selected and the incoming water temperature.

2 TEMP

The programmed cycles default to the NORMAL cycle option. Press the TEMP pad to choose SANITIZE or HIGH.

SANITIZE OPTION

To sanitize your dishes and glassware, select SANITIZE option. When selected, the light will come on and remain on until end of cycle. The water temperature in the final rinse will be raised to 155 °F (68°C) and will maintain that temperature for 9 minutes. This option is available in HEAVY and NORMAL wash cycles. Only these sanitization cycles have been designed to meet the requirements for NSF soil removal and sanitization efficacy. There is no intention, either directly or indirectly, that all cycles on a certified machine have passed the sanitization performance test.

The cycle time will be extended until the proper water temperature is reached. Washing action will continue during the water heating delay. For best results, the incoming water temperature should be at least 120°F (49°C).

The sanitize criteria may not be satisfied if there is an interruption of the cycle, power failure or if the incoming water temperature is below 120 °F (49 °C).

Press the TEMP pad a second time to turn off the SANITIZE option. The light beside the SANITIZE pad will turn off.

HIGH TEMP OPTION

When the HIGH Temp option is selected, the dishwasher heats water in the main wash to approximately 155°F (68°C).

This increase in water temperature helps the dishwasher detergent remove food grease and soil from dishes more effectively and aids in improved drying performance. When the option is selected, the HIGH temp indicator will come on and remain on until the end of the cycle. To turn off the HIGH temp option, press the TEMP pad to select a different temperature option.

3 DRY

MAX DRY

When the MAX DRY option is selected, the dishwasher extends drying time by approximately 20 minutes. The MAX DRY option can be used with all cycles except ENERGY SAVER. For best drying performance, also apply an increased wash temperature by selecting HIGH Temp or even better, the SANITIZE option. The energy required to use the MAX DRY option costs pennies per cycle. You may choose not to select the MAX DRY option; however you may have items in your dish load that will not be completely dry at the end of the cycle.

HEAT DRY

The HEAT DRY option in combination with rinse aid will enhance drying performance. The energy required to use the HEAT DRY option costs pennies per cycle; however you will have items in your dish load that will not be completely dry at the end of the cycle.

Select the NORMAL cycle and HIGH Temp wash option along with a Rinse Aid agent for improved drying performance.

4 DELAY TIME

The DELAY option allows you to automatically delay starting your dishwasher from 2-4-6 hours.

To activate DELAY option, press the pad once for a 2 hour delay, twice for 4 hours and three times for 6 hours. A light will come on indicating the delay start hours and will remain on until cycle starts.

Press the START/CANCEL pad to start the DELAY option. If the DELAY option is interrupted, the START/CANCEL pad will have to be pressed again to return to DELAY option.

To cancel the DELAY option and to begin the selected cycle before the delay period is over, press and hold START/CANCEL pad for 3 seconds.

5 START/CANCEL BUTTON

When cycle and options are selected, LEDs of selected cycle and options are illuminated.

To start the cycle, press START/CANCEL pad and close the dishwasher door immediately.
You can cancel a cycle anytime during the cycle. Press and hold the START/CANCEL pad for 3 seconds. The light beside the cycle and option selected will go out, the START/CANCEL light will remain illuminated, the dishwasher will start a 10 seconds of idle time. At the end of the drain, select the next desired cycle.

6 STATUS INDICATOR LIGHTS
The WASHING light comes on at the beginning of the cycle and remains on until the end of the main wash.
The CLEAN light will come on at the end of cycle and remain on until the door is opened.
When the SANITIZE option is selected, the SANITIZED light will glow when the SANITIZE cycle is finished. If the dishwasher did not properly sanitize the dishes, the light will not come on. This can happen if the cycle is interrupted. The light will remain on until the door is opened.
White Light
The WHITE LIGHT illuminates on the floor when the wash is complete.
Blue Light
The BLUE LIGHT illuminates on the floor to indicate that the wash cycle is operating.

4. OPERATING INSTRUCTIONS

4.1 Getting Started

1. Load Dishwasher (See Preparing and Loading Dishes).
2. Add detergent (See Filling the Detergent Dispenser)).
3. Add Rinse Aid, if needed (See Rinse Aid).
4. Select desired CYCLE (See Cycle and Option Chart). The cycle indicator light glows when selected.
5. Select desired OPTION (See Option Selections). Option Light glows when selected.
6. Run hot water faucet nearest dishwasher until water is hot. Turn water off.
7. To start, press START/CANCEL pad and close door immediately.

NOTE

If the dishwasher door is opened while the unit is running, the START/CANCEL pad must be pressed and the door shut immediately to return the unit to the selected cycle and option, this must happen within 10 minutes for the unit to continue the cycle.

4.2 Opening the door during cycle

If you open the door while a cycle is running or delay is counting down, the dishwasher will stop running. The LEDs of selected cycle and options are illuminated. The LED above START pad will blink to press start.

To resume:

Press START pad and close the dishwasher door immediately.
The status indicator lights are on. A tone will sound indicating that the dishwasher will begin running from the point of interruption after the door is closed.
If the dishwasher door is kept open for too long, or the door is closed without pressing START pad, the running cycle or delay countdown will be canceled.

4.3 Child Lock Controls

To prevent children from accidentally changing the dishwasher cycle or starting the dishwasher, lock the dishwasher controls:

Press and hold the DRY pad for 3 seconds while the door is open.
An indicator light on the lock graphic pad will illuminate when the controls are locked and no new selections can be made until the lock is released.

To unlock the controls, press the DRY pad, again for 3 seconds until the indicator light goes out.

4.4 To Cancel a Cycle

You can cancel a cycle anytime during the cycle:

Press and hold the START/CANCEL pad for 3 seconds.

The light next to the selected cycle and option goes out and the START/CANCEL light stays on. The dishwasher starts a 90 second drain. At the end of the drain, select the next desired cycle.

4.5 Cycle and Option Chart

Cycle and Intended use	Selectable Options Temperature; Drying	Water per Cycle (approx.)	Duration(approx)[1]
HEAVY Recommended for pots, pans, casseroles and dinnerware having light to heavily soiled loads.	SANITIZE, MAX DRY, HEAT DRY	4.8-7.1 gal 18-27 L	2.5 - 3.75 Hours
NORMAL [1] Recommended for lightly to heavily soiled loads.	SANITIZE, HIGH TEMP[1], MAX DRY, HEAT DRY	2.5-5.8 gal 9.5-22 L	2 - 2.75 Hours
1 HOUR Recommended for lightly soiled loads only.	HEAT DRY	5-5.5 gal 19-21 L	1 Hour
ENERGY SAVER A cycle used to reduce dishwasher energy consumption.	HEAT DRY	2.6-2.9 gal 10-11 L	2 - 2.5 Hours

[1] Does not include drying time.

4.6 Preparing the Dishes

Scrape away large pieces of food, bones, pits, toothpicks, etc. The continuously filtered wash fluid removes remaining food particles. Burned-on foods should be loosened before loading. Empty liquids from glasses and cups.

Foods such as mustard, mayonnaise, vinegar, lemon juice and tomato based products may cause discoloration of stainless steel and plastics if allowed to sit for a long period of time. Unless the dishwasher is to be operated at once, it is best to pre-rinse or use the rinse only cycle to rinse off these food soils.

- Load racks so that large items do not prevent the detergent dispenser from opening.
- Check manufacturer's recommendations before washing items in question.
- If the dishwasher drains into a Food Disposer, be sure disposer is completely empty before starting dishwasher.

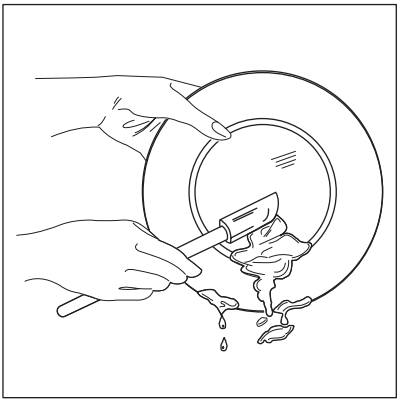

NOTE

Racks and features in your dishwasher model may vary in appearance from illustrations in this manual.

4.7 Loading the Upper Rack

The upper rack is designed for flexibility in loading a wide variety of items including cups, glasses, stemware, small plates, bowls, etc.

- Load glasses and plastic items in upper rack only.
- Load items with open ends facing down for better cleaning and draining.
- Long-handled knives and utensils can be placed in upper rack.

Be sure nothing protrudes through the bottom of the rack to block rotation of the spray arm.

IMPORTANT

Damage may occur if delicate items touch each other during dishwasher operation.

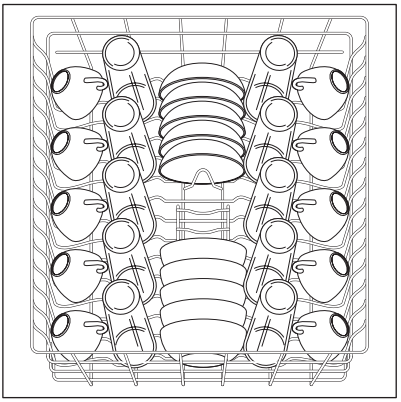

10 place settings standard loading pattern

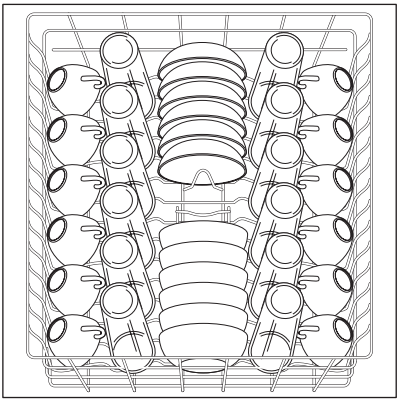

12 place settings standard loading pattern

4.8 Upper Rack

The upper rack can be used to wash a wide assortment of items when you don't have a full load. Also, when the upper rack fills up with glasses and the lower rack is still empty, you don't have to wait anymore for clean glasses.

NOTE

Stemware holder/cup shelf not available on all models.

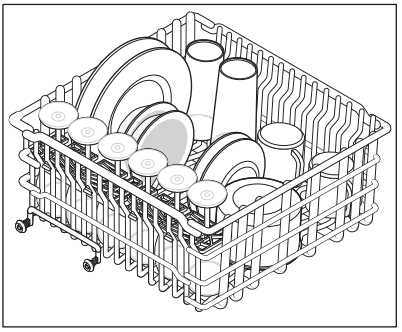

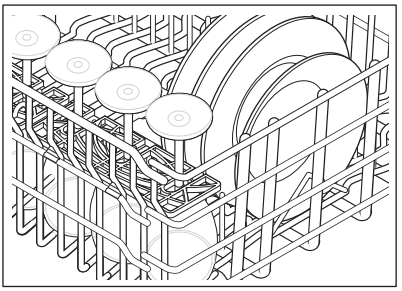

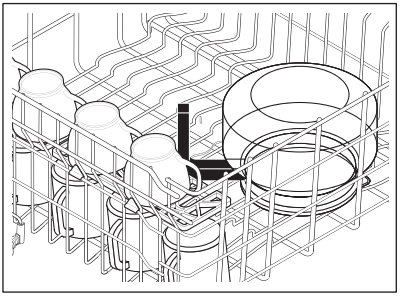

Some models have a fold-down cup shelf or a cup shelf/stemware holder. They can be used to load two levels of cups, juice glasses, and other short items. Stagger items on upper level so that water can reach all inside surfaces. Fold up to load tall glasses.

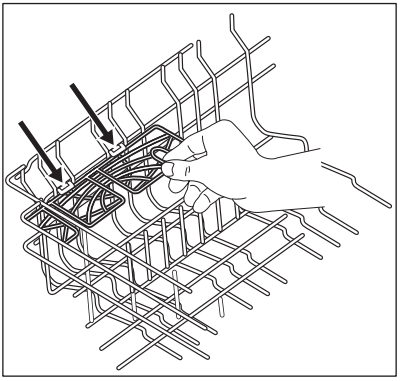

Place the clips of the cup shelf over the horizontal rack wires and push down to attach the cup shelf onto the second wire of the upper rack.

4.9 Loading the Third Level Tray

The third level tray is designed for small items such as cutlery, utensils, and kitchen tools. Placing these items on this tray helps optimize the dishwasher's capacity and ensures efficient cleaning. Do not exceed the recommended weight limit of 1.5 kg, and use the tray only for lightweight items. Overloading may reduce cleaning performance and could damage the rack.

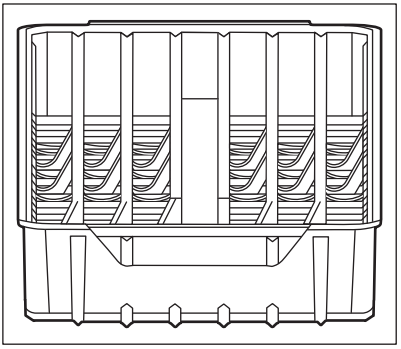

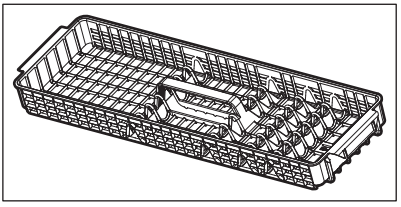

4.10 Loading the Bottom Rack

The lower rack is best for plates, saucers, bowls, and cookware. Large items should be placed along the edge so they do not block the spray arm rotation.

For best results, place bowls, casseroles, and sauce pans with soiled surface facing down or toward the center. Tilt slightly for better drainage. Make sure tall items do not block spray arm rotation.

Be sure pan handles do not protrude through the bottom of the rack and block the spray arm rotation.

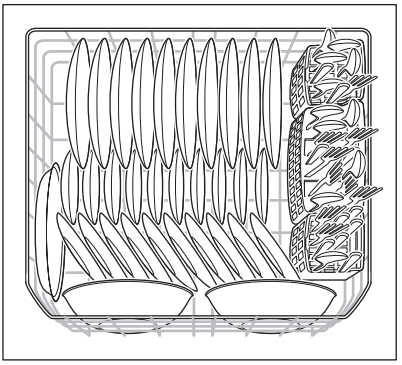

10 place settings standard loading pattern.

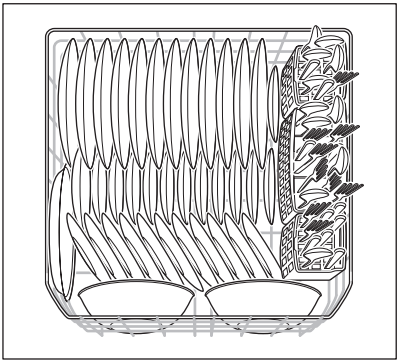

12 place settings standard loading pattern.

4.11 Loading the Silverware Basket

⚠ CAUTION!

Load sharp items (knives, skewers, etc.) pointing down. Failure to do so may result in injury.

NOTE

Features and appearance of racks and silverware basket may vary from your model.

Load the silverware basket while it is in the bottom rack or take the basket out for loading on a counter or table.

Use suggested loading patterns, as shown, to increase washability of the silverware.

Be sure nothing protrudes through bottom of basket or rack to block the spray arm.

Do not mix silver and stainless to avoid damaging the silver finish.

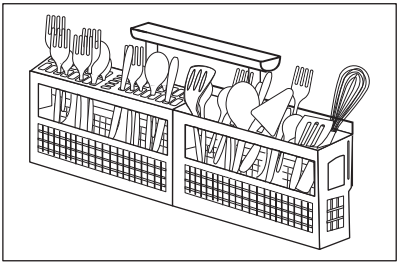

When covers are up, mix items in each section of the basket with some pointing up and some down to avoid nesting. Water spray cannot reach nested items.

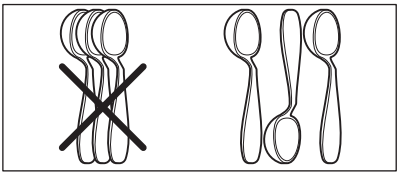

4.12 Adding a Dish

To add or remove items after wash cycle starts:

1. Unlatch door and wait a few seconds until wash action stops before opening
2. Add the item and wait a few seconds to allow cold air to slowly expand inside dishwasher
3. Close door firmly to latch and press the START/CANCEL pad to resume.

4.13 Filing the Detergent Dispenser

The detergent dispenser has two detergent cups. The smaller one is for addition to the pre-wash and the larger is for release to the main wash.

- Use only fresh automatic dishwashing detergent. Other detergents may cause oversudsing.
- When using automatic dishwashing detergent tabs, place one tab in main wash cup and close.
- Add detergent just before starting cycle.
- Store detergent in a cool, dry location. Moist or caked detergent may not dissolve properly.

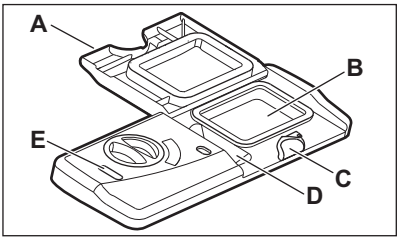

A. Cover
B. Main Wash Cup
C. Cover Latch
D. Pre-Wash Cup
E. Rinse Aid Indicator

If the cover is closed on the Main Wash Cup open by pressing the Cover Latch.

4.14 How much detergent to use

The amount of detergent to use depends on the water hardness. Water hardness is measured in grains per gallon. Using too little detergent can result in poor cleaning and hard water filming or spotting. Using too much detergent in soft water can cause etching to some glassware which is surface damage that appears like a film but cannot be wiped off. Your local water company, water softener company or county extension agent can tell you the water hardness in your area.

4.15 Dosage of detergent

Detergent usage chart

Cycle	Soft Water (0-3 grains)	Medium Hard Water (4-8 grains)	Hard Water (9-12 grains)	Very Hard Water (Over 12 grains)
HEAVY or NORMAL	2 teaspoons(each cup:1/4 full)	5(each cup: fill to line above "Regular") teaspoons	8 teaspoons(each cup: completely full)	Each Cup: Completely Full (water softener recommended)
1 HOUR	2 teaspoons(Main Wash Cup:1/4 full)	5(each cup: fill to line above "Regular") teaspoons	8 teaspoons(Main Wash Cup: completely full)	Main Wash Cup: Completely Full (water softener recommended)
ENERGY SAVER	2 teaspoons (each cup: 1/4 full)	5 teaspoons (each cup: fill to line above "Regular")	8 teaspoons (each cup: completely full)	Each Cup: Completely Full (water softener recommended)

As a rule, use 1 teaspoon for each grain above 12. For very hard water, detergent alone may not be enough and then a water softener is recommended to improve water quality and dishwashing performance. However, when - using automatic dishwashing detergent tablets or packets simply place one in the main wash cup.

⚠ CAUTION!

The use of industrial grade detergent can damage the heating coil and other parts of the dishwasher leading to damage to the unit and surrounding property. Use only household grade automatic dishwasher detergents.

4.16 Rinse Aid

Rinse aid greatly improves drying, reduces water spots, filming, and lubricates wash arm bearing for proper rotation. With it water "sheets" off dishes rather than forming water droplets that cling and leave spots.

A dispenser, located next to the detergent cup, automatically releases a measured amount of rinse aid during the last rinse. If spotting and poor drying are problems, increase the amount of rinse aid dispensed by rotating the dial to a higher number. The dial is located under the dispenser cap. The indicator will be dark when full and will show clear when it is time to refill.

To add liquid rinse aid, turn dispense cap 1/4 turn counterclockwise and lift out. Pour in rinse aid until liquid touches the indicated fill level. Replace cap.

Do not overfill since this can cause oversudsing. Wipe up any spills with a damp cloth.

The dispenser holds enough for 35 to 140 washes, depending on setting.

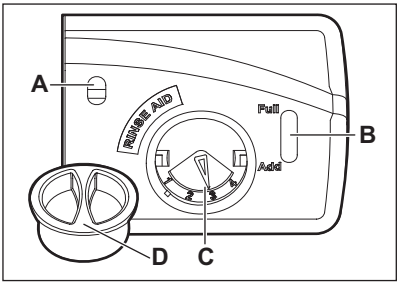

A. Dispenser Opening
B. Indicator
C. Adjustable Setting
D. Dispenser Cup

4.17 Water Pressure

The hot water line to dishwasher must provide water pressure between 20 and 120 psi.

Low Water pressure may occur when laundry or showers are in operation. If you experience poor wash performance you may need to wait until water use is reduced before starting dishwasher.

4.18 Water Temperature

Hot water is needed for best dishwashing and drying results. Water entering dishwasher should be at least 120°F (49°C) to give satisfactory results.

To check water temperature entering dishwasher:

- Turn on hot water faucet nearest dishwasher for several minutes to clear cool water from pipes.
- Hold a candy or meat thermometer in the water stream to check the temperature.
- If temperature is below 120°F (49°C), have a qualified person raise the hot water heater thermostat setting.

➔ IMPORTANT

Before starting a cycle, run hot water to clear cool water from pipe.

5. CARE AND CLEANING

5.1 Glass Trap

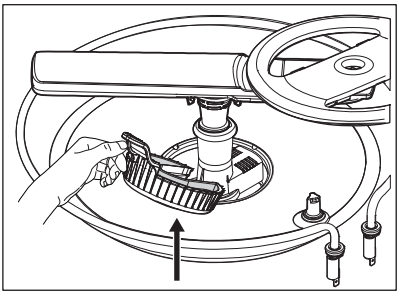

Glass Trap Removal

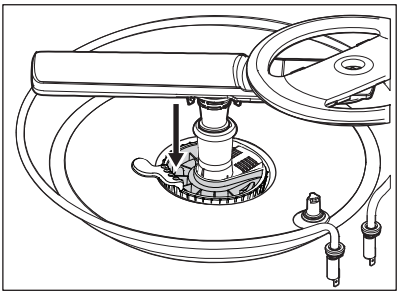

Glass Trap Replacement

To empty the glass trap:

1. Pull the glass trap handle up and out toward you to remove.
2. Empty any debris collected in the glass trap.
3. Once empty, slide the glass trap back into the same location as when removed, then push down to lock back into position. See image above.

ⓘ

Hard water may cause lime deposit buildup on the interior of the dishwasher. For cleaning instructions see "Removing Spots and film" section.

5.2 Outer Door

⚠ WARNING!

Allow heating element to cool before cleaning the interior. Failure to do so can result in burns.

Outer Door
Clean outer door with warm soapy water and a dishcloth or sponge. Rinse with clean water and a dry cloth. Do not use harsh cleaners. Inside - The inside of the dishwasher and filter are self-cleaning with normal use. If needed, clean around the tub gasket area with a damp cloth. The filter is self-cleaning. A glass trap located in the center of the filter is designed to collect pieces of broken glass, straws, bones and pits.

5.3 Overfill Protector

Overfill Protector keeps dishwasher from overfilling and is located in the left front corner of the tub.

- Clean occasionally with household cleaner containing vinegar or bleach to dissolve any buildup.
- Overfill Protector should move up and down freely about one inch. If it does not move, lift and clean underneath.

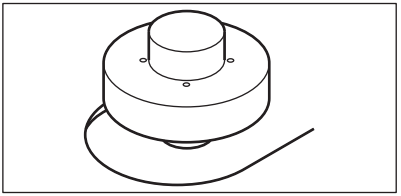

5.4 Cleaning the Interior

Use Frigidaire ReadyClean® Dishwasher Cleaner Tablets (Item # 10FFPRDT01) to clean and freshen the interior of the dishwasher. Place one tablet in the bottom of the empty dishwasher tub (not the dispenser), run a rinse cycle, leave washer door closed for at least 6 hours, then resume normal use. One tablet used monthly is recommended for best results.

5.5 Care of drain air gap

If a drain air gap was installed for your built-in dishwasher, check to make sure it is clean so the dishwasher drains properly. A drain air gap is usually mounted on the counter top and can be inspected by removing the cover. This is not part of your dishwasher and is not covered by warranty.

5.6 Winterizing

A dishwasher left in an unheated place should be protected from freezing. Have a qualified person do the following:

To Disconnect Service:

1. Turn off electrical power to the dishwasher at the supply source by removing fuses or tripping circuit breaker.
2. Shut off water supply.
3. Place a pan under the inlet valve. Disconnect water line from inlet valve and drain into pan.
4. Disconnect drain line from pump and drain water into pan.

To Restore Service:

1. Direct water line discharge into a pan and open the valve to flush the line.
2. Reconnect the water, drain, and electrical power supply.
3. Turn on water and electrical power supply.
4. Fill both detergent cups and run dishwasher through a HEAVY WASH cycle.
5. Check connections to make sure they do not leak.

⚠ CAUTION!

Freezing temperatures may cause water lines to rupture. Be sure all supply lines to and circulating lines within your dishwasher are protected. Failure to do so could result in property damage.

NOTE

See Installation Instructions for more details on disconnecting and restoring service to your dishwasher.

5.7 Removing Spots and Film

Hard water can cause lime deposit buildup on the interior of the dishwasher. Dishes and glasses may also get spots and film for a number of reasons. (See Glassware/ Flatware Spotted or Cloudy section). To remove buildup, and film, clean using the following instructions:

1. Load clean dishes and glasses in normal manner. Do not load any metal utensils or silverware.
2. Do not add detergent.
3. Select the Normal Wash cycle. Close the door. Press START/CANCEL pad.
4. Allow dishwasher to run until it starts the second water fill (approximately 8 minutes).
5. Open the door, pour 2 cups of white vinegar into the bottom of dishwasher.
6. Close the door and allow cycle to finish.

6. TROUBLESHOOTING

6.1 Before You Call:

Before calling for service, review this list. It may save you both time and expense. This list includes common experiences that are not the result of defective workmanship or material in your dishwasher.

Food Soils Left on Dishes

- Choose another cycle for longer washing time.
- Check rack loading section for proper loading-avoid nesting items.
- Do not overload the dishwasher (See Preparing and Loading Dishes).
- Check to verify that the glass trap is maintained and installed properly (See Care and Cleaning).
- Home water pressure may be too low-should be 20 to 120 pounds per square inch (psi).
- Check the incoming water temperature. Be sure it is at least 120°F (49°C).
- Check water hardness. For extremely hard water, it may be necessary to install a water softener. (See Detergent Chart).
- Use Fresh Detergent.
- Make sure items are not blocking the spray arms, preventing them from rotating.
- Check to verify that the glass trap is maintained and installed properly (See Care and Cleaning)

Dishes not Dry

- Selecting HEAT DRY, HIGH TEMP, or SANITIZE options improves drying.
- If you have not selected MAX DRY or HEAT DRY, and no LEDs are illuminated for these Options, then the heater has been de-activated during the drying phase of the selected Wash Cycle. This is known as Air Dry. Air Dry slightly lowers the energy usage but increases the likelihood that the dishware will not be completely dried.
- Make sure the rinse aid dispenser is filled.
- Increase the discharge setting of rinse aid. (See Rinse Aid .
- Check for proper loading-avoid nesting items.
- Plastic items may need to be towel dried.
- Cups with a concave bottom collect water. Load them at the far left of the upper rack so they are held in a tilted position
- Containers, bowls, pots/pans, and any dishware with concave surfaces that can collect water should be placed in the rack facing or angled down so that water is able to drain even from the lowest point.

Drying Tip

- Select the Normal Wash and HIGH TEMP pads along with a Rinse Aid agent for improved drying performance.
- Containers, bowls, pots/pans, and any dishware with concave surfaces that can collect water should be placed in the rack facing or angled down so that water is able to drain even from the lowest point.
- Plastic items may need to be towel dried.

Glassware/Flatware Spotted or Cloudy

- Check water hardness. For extremely hard water, it may be necessary to install a water softener. (See Detergent Chart).
- Water temperature may be low. Avoid extremely low or high temperatures.
- Avoid overloading and improper loading. (See Preparing and Loading Dishes).
- Use fresh detergent. Old detergent is ineffective.
- Make sure rinse aid dispenser is filled.
- Check to see that proper amount of detergent is being used for cycle selected. (See Detergent Dispenser).
- Home water pressure may be too low-it should be 20 to 120 pounds per square inch (psi).

Dishware Chipped

- Load with care and do not overload. (See Preparing and Loading Dishes).
- Place delicate items in top rack.
- Place glasses securely against pins and not over pins.
- Load items so they are secure and don’t jar loose when moving racks in and out. Move racks in and out slowly.

- Make sure tall glasses and stemware clear the top of the tub when the rack is pushed in.
- Fine antique china and crystal should be hand-washed.

Dishware Stained or Discolored

- Tea and coffee can stain cups. Remove the stains by hand washing in a solution of 1/2 cup (120 ml) bleach and one quart (1L) of warm water. Rinse thoroughly.
- Iron deposits in water cause a yellow or brown film. A special filter installed in the water supply line corrects this problem. (See Removing Spots and Film).
- Aluminum utensils can leave gray/black marks when they rub against other items. Load Properly.
- Certain high acid foods can cause discoloration of stainless steel and plastics if allowed to sit for a long period. Rinse by hand if not operating dishwasher at once.
- Mixing stainless steel and silver utensils in silverware basket can cause pitting of the stainless steel blades. Avoid mixing stainless steel and silver.

Etching

- Using too much detergent especially in soft or softened water causes damage that looks like a film but cannot be removed.
- Adjust the amount of detergent based on the water hardness. (Check Detergent Chart).
- Lower the water temperature by selecting one of the lower temperature options.

Dishwasher Won't Fill

- Assure the water supply is turned on.
- Check that the overfill protector moves up and down freely. (See Overfill Protector section).

Detergent Left in Cups

- Detergent may be old. Discard and use fresh detergent.
- Be sure the dish load doesn't block spray from entering the detergent cup.
- Check to see if cycle has been completed.
- Make sure items do not prevent the detergent dispenser from opening.

Vapor at Vent

- Spilled rinse aid can cause foam and lead to overflowing. Wipe up any spills with a damp cloth.

Normal Sounds You Will Hear

- Normal sounds include water fill, water spray, draining and motor sounds.
- There is a noticeable change in sound when the wash action switches between the lower and middle spray arm. This is normal since each spray arm has its own sound.
- It is normal for the dishwasher to pause (no sound) when the wash action is switching between the lower and middle spray arms.

Water in Bottom of Tub

- Water left in the tub bottom after the cycle is complete is not normal. If water remains in the bottom of the tub, the dishwasher may not be draining properly. (See Dishwasher Does not Drain Properly).

Dishwasher Leaks

- Check that the door gasket is pressed into its mounting channel, reaches to the bottom of the tub and does not extend beyond the end rib so as to interfere with door closure.
- Spilled rinse aide can cause foam and lead to overflowing. Wipe up any spills with a damp cloth.
- Check to see that the dishwasher is level. (See Installation Instructions).
- Avoid oversudsing by using the correct amount of detergent designed for automatic dishwashers.
- Check to see that dishwasher is level. (See Installation Instructions).

Dishwasher Won't Run

- Check to see if circuit breaker is tripped or if a fuse is blown.
- Make sure water supply is turned on.
- Check to see if cycle is set correctly. (See Operating Instructions).
- Is dishwasher set for DELAY Option?
- Make sure START/CANCEL pad is pressed after cycle has been selected.
- Make sure door is closed and latched.

Dishwasher Does Not Drain Properly

- If unit is hooked up to a food waste disposer, make sure the disposer is empty.

- Assure the knockout plug has been removed from inside the food waste disposer inlet.
- Assure the drain hose isn't kinked.
- Make sure cycle is complete, not in a pause.
- Assure the glass trap is maintained and installed properly assuring no clogs (See Care and Cleaning).

Cycle Takes a Long Time

- The cycle may have been automatically lengthened to reach key temperatures due to some factor such as a cool water supply or a large load of dishes.
- Delay option may have been selected.
- Choose lower temperature options to shorten the cycle.
- Cycles that are soil-sensing adjust automatically to assure a good wash - heavier soils elicit a longer cycle response.

Dishwasher has an Odor

- Soiled dishes left in dishwasher too long can create an odor. Pre-rinse the dishes prior to loading.
- There is a 'new' smell when first installed. This is normal
- Check to see if unit is draining properly. (See Dishwasher Does Not Drain Properly).

Stains on Tub Interior

- Washing large amounts of dishware with tomato-based soil causes a pink/ orange appearance. This does not affect performance and gradually fades over time. Pre-rinsing reduces the chance of staining. Using no HEAT DRY option lessens staining.

Opening the door during cycle

- If the dishwasher door is opened while the unit is running, the START/ CANCEL pad must be pressed and the door shut immediately to return the unit to the selected cycle and option, this must happen within 10 minutes for the unit to continue the cycle.

7. LIMITED WARRANTY

Your appliance is covered by a one year limited warranty. For one year from your original date of delivery, Electrolux will pay all costs for repairing or replacing any parts of this appliance that prove to be defective in materials or workmanship when such appliance is installed, used and maintained in accordance with the provided instructions. If your product cannot be repaired or replaced, you will be refunded the purchase price less any depreciation, taxes or other costs.

Exclusions

This warranty does not cover the following:

1. Products with original serial numbers that have been removed, altered or cannot be readily determined.
2. Product that has been transferred from its original owner to another party or removed outside the USA, Puerto Rico, or Canada.
3. Rust on the interior or exterior of the unit.
4. Products purchased "as-is" are not covered by this warranty.
5. Food loss due to any refrigerator or freezer failures.
6. Products used in a commercial setting.
7. Service calls which do not involve malfunction or defects in materials or workmanship, or for appliances not in ordinary household use or used other than in accordance with the provided instructions.
8. Service calls to correct the installation of your appliance or to instruct you how to use your appliance.
9. Expenses for making the appliance accessible for servicing, such as removal of trim, cupboards, shelves, etc., which are not a part of the appliance when it is shipped from the factory.
10. Service calls to repair or replace appliance light bulbs, air filters, water filters, other consumables, or knobs, handles, or other cosmetic parts.
11. Surcharges including, but not limited to, any after hour, weekend, or holiday service calls, tolls, ferry trip charges, or mileage expense for service calls to remote areas, including the state of Alaska.

12. Damages to the finish of appliance or home incurred during installation, including but not limited to floors, cabinets, walls, etc.
13. Damages caused by: services performed by unauthorized service companies; use of parts other than genuine Electrolux parts or parts obtained from persons other than authorized service companies; or external causes such as abuse, misuse, inadequate power supply, accidents, fires, or acts of God.

Disclaimer of implied warranties; Limitation of remedies

CUSTOMER'S SOLE AND EXCLUSIVE REMEDY UNDER THIS LIMITED WARRANTY SHALL BE PRODUCT REPAIR OR REPLACEMENT AS PROVIDED HEREIN. CLAIMS BASED ON IMPLIED WARRANTIES, INCLUDING WARRANTIES OF MERCHANTABILITY OR FITNESS FOR A PARTICULAR PURPOSE, ARE LIMITED TO ONE YEAR OR THE SHORTEST PERIOD ALLOWED BY LAW, BUT NOT LESS THAN ONE YEAR. ELECTROLUX SHALL NOT BE LIABLE FOR CONSEQUENTIAL OR INCIDENTAL DAMAGES SUCH AS PROPERTY DAMAGE AND INCIDENTAL EXPENSES RESULTING FROM ANY BREACH OF THIS WRITTEN LIMITED WARRANTY OR ANY IMPLIED WARRANTY. SOME STATES AND PROVINCES DO NOT ALLOW THE EXCLUSION OR LIMITATION OF INCIDENTAL OR CONSEQUENTIAL DAMAGES, OR LIMITATIONS ON THE DURATION OF IMPLIED WARRANTIES, SO THESE LIMITATIONS OR EXCLUSIONS MAY NOT APPLY TO YOU. THIS WRITTEN WARRANTY GIVES YOU SPECIFIC LEGAL RIGHTS. YOU MAY ALSO HAVE OTHER RIGHTS THAT VARY FROM STATE TO STATE.

If You Need Service

You must provide the appliance serial number and your receipt, delivery slip, or some other appropriate payment record to establish the warranty period should service be required. If service is performed, it is in your best interest to obtain and keep all receipts. Service under this warranty must be obtained by contacting Electrolux at the addresses or phone numbers below.

This warranty only applies in the USA, Puerto Rico and Canada. In the USA and Puerto Rico, your appliance is warranted by Electrolux Consumer Products, Inc. In Canada, your appliance is warranted by Electrolux Canada Corp. Electrolux authorizes no person to change or add to any obligations under this warranty. Obligations for service and parts under this warranty must be performed by Electrolux or an authorized service company. Product features or specifications as described or illustrated are subject to change without notice.

USA

1-800-374-4432

Electrolux Consumer Products, Inc.

10200 David Taylor Drive

Charlotte, NC 28262

Canada

1-800-265-8352

Electrolux Canada Corp.

5855 Terry Fox Way

Mississauga, Ontario, Canada L5V 3E4

8. QUEBEC RIGHT TO REPAIR

Though Frigidaire makes every effort to make replacement parts, repair services and information necessary to maintain or repair our products available to consumers, parts, service and information are not guaranteed, pursuant to section 39 of the Consumer Protection Act, CQLR, c. P-40.1 and sections 79.18 to 79.20 of the Regulation respecting the application of the Consumer Protection Act, CQLR, c P-40.1, r. 3. If you need replacement parts, you may call us at 1 (800) 265-8352 for service in French or English, or purchase online at **Frigidaire Parts | Shop Frigidaire Replacement Parts & Accessories - Frigidaire Appliance Parts.**

You may book repair services online at https://www.frigidaire.ca/RIGHT-TO-REPAIR/. Alternatively, our resource

library is available at **Resource Library | Frigidaire** to help you diagnose and resolve issues which may arise during the lifetime of your appliance.

Legend

Availability of replacement parts, repair services, and information for maintenance or repair.	
⚠	Partially Available
☒	Not Available
✓	Available

Dishwashers	⚠	Replacement tub assemblies are not available.

frigidaire.com

A31414901